BORDIGNON | Güvenal GTH

NITROGEN GAS SPRINGS

for DIES and MOULDS

MAXIMUM Safety Performance

100% QUALITY

FIELDS OF APPLICATION

Die-making
Hot Stamping
Injection Moulding
Die Casting
Forging Processes

EGS - VGS - AGS - TGS - IGS - VV - CHT - CSMHT

We are pleased to announce the launch of our partnership with Bordignon, a company well-known for its superior performance and safety systems in Gas Springs. This valuable collaboration enables us to offer unique performance in terms of sustainable quality, price/performance ratio, and safety with the addition of this new brand to our product range.

As the exclusive distributor and business partner in Türkiye, you can obtain Bordignon Gas Springs from us, either through our extensive stock options or with fast delivery times.

PED certified 2014/68/EU

All Bordignon gas springs offered by Güvenal comply with the Pressure Equipment Directive ***PED 2014/68/EU,*** which came into force in 2016. This directive defines and regulates high standards and safety requirements for pressure equipment. To ensure maximum safety during operation, the durability and functioning of the safety systems of all gas springs have been tested under both normal and heavy-duty conditions.

USE INSTRUCTIONS

NO

The threaded hole on the piston rod is for transport and maintenance purposes only
Do not use it for fastening the nitrogen gas spring.

No side forces. Work stroke always perpendicular to the base of the nitrogen gas spring.

Avoid scratching and scoring on the piston rod.

Do not make mechanical work on the nitrogen gas spring.

Do not disassemble the nitrogen gas spring. Maintenance only by authorized people. The authorization is given only after a class held by Bordignon.

Max impact and max release speed: 1.6 m/s (1 m/s for TGS series). Maximum number of working cycles per minute: see product tables with the technical specifications.

Do not freely release the piston rod.
The piston rod goes up together with the press.
If the screws used for the base-mounting are broken or deformed (stretched), find out the possible causes and eliminate them: there might have been free/uncontrolled releases of the piston rod.

Protect against liquid or solid contaminants. The nitrogen gas springs are protected against contaminants by wiper ring. Do not use chemical products with low flash point (petrol, solvents alcohol, etc.). Clean only with a dry cloth.

YES

Always fasten the nitrogen gas spring at the base to a flat and clean support surface with high resistance screws. Gas springs with more than one threaded hole at the base: the center hole is for charging/discharging only. Use all the other holes at the base for fixing. Fixing with flange: fasten the flange to a flat and clean support surface with high resistance screws. A safety plate must be present under the gas spring.

Charge only with NITROGEN (N_2).

Hole for cylinder body Ø +1 mm. Draining hole for liquids.

Lubricate the piston rod with grease with disulfide molybdenum (MoS_2).

Operating temperature: MIN 0°C (32°F) - MAX 80°C (176°F). Do not heat.

Protect against solid contaminants with a metal bellow, liquid contaminants with a polymeric bellow. Fasten the protection bellow to the die plate.

When using nitrogen gas springs in a LINKED SYSTEM, make sure to request/order the gas springs "discharged, without valve" ("L-version").
Otherwise, to adapt a self-contained gas spring for a linked system, BEFORE installing any fittings and hoses: remove the side cap using a flat-end allen key (hexagonal key); discharge the gas spring completely using the proper ADS discharging device; remove the valve cartridge using a flat-end 3 mm allen key (hexagonal key).

The products in this catalogue are designed for the use in press tools, dies and moulds. We can not take any responsibility for any not proper or different use.

IMPORTANT: periodically check for use instructions updates on our website. For possible additional use instructions not explicitly specified here, refer to the ISO 11901-5 standard. Pass the nitrogen gas springs use instructions to the end-user of the product.

SAFETY & RELIABILITY
The Safety Systems that Set Our Gas Springs Apart from Competitors

Safety: Bordignon nitrogen gas springs have always been built with single ("monolithic") thick mechanical components, in order to ensure product integrity and maximum user's safety even under the most extreme wrong use conditions (collisions, etc.).

Bordignon construction - Single "monolithic" components

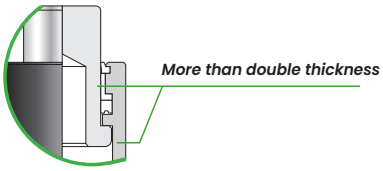

Other constructions - Several assembled components

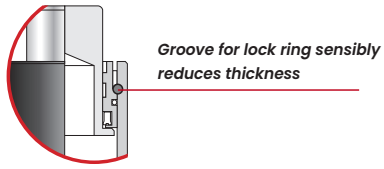

Important: Bordignon gas spring components are coupled through thread connections, for the highest possible safety. Thread connections are standard in high pressure equipment around the world, such as waterjet cutting nozzles and ultra high pressure vessels (~10000 bar).

Bordignon construction - Body/bottom cap threaded junction

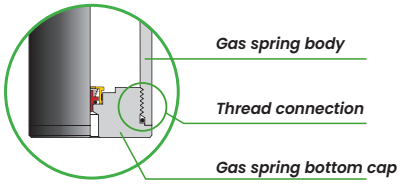

Other constructions - Body/bottom cap junction with lock ring

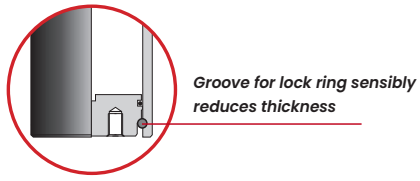

Reliability: All Bordignon nitrogen gas springs are self-lubricated, for millions of cycles, thanks to a solid lubricant.

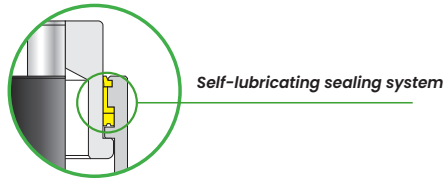

ADVANTAGES of USING GAS SPRINGS

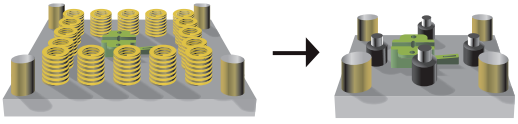

"Less Space Needed for the Same Force"

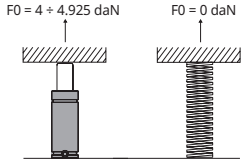

+ Full initial force at the beginning of the stroke
+ No preload necessary

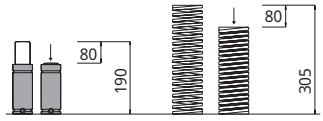

+ Smaller installation height but same stroke and same force

INFORMATION

- Stroke available at 100 %
- You might adjust the initial force with the charging and discharging set (model COMPL)
- Charging pressure: MIN 20 bar - MAX see table on catalogue
- Initial force increases by ~ 0.34% per each 1°C increase from the reference temperature of 20°C (room temperature, do not heat)
- How to calculate the charging pressure (bar) for initial forces (daN) lower than

- **Please note:** the final forces (forces at full stroke) indicated in the catalogue are reference values measured in static conditions. The actual final forces generated under use conditions may vary, since they depend on the specific parameters of the application, such as the working speed (cycles per minute).

F initial in table:

$$\text{Charging pressure (bar)} = \frac{\text{F (daN) x max charging pressure (bar)}}{\text{F initial in table}}$$

- How to calculate the force (daN) at intermediate stokes:

$$F = \text{Finitial} + \frac{\text{intermediate stoke}}{\text{max stroke}} \times (F_{final} - F_{initial})$$

Gas Spring Accessories Accessories for fixing, charging/discharging, linking to open system, etc. can be found in this catalogue further on.
ATTENTION: use Bordignon nitrogen gas springs with Bordignon accessories only

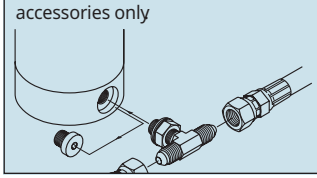

2D & 3D Technical drawings
Download various 2D & 3D file formats from
www.guvenal.net

EGS

PED in accordance with 2014/68/EU

VDI

VDI 3004

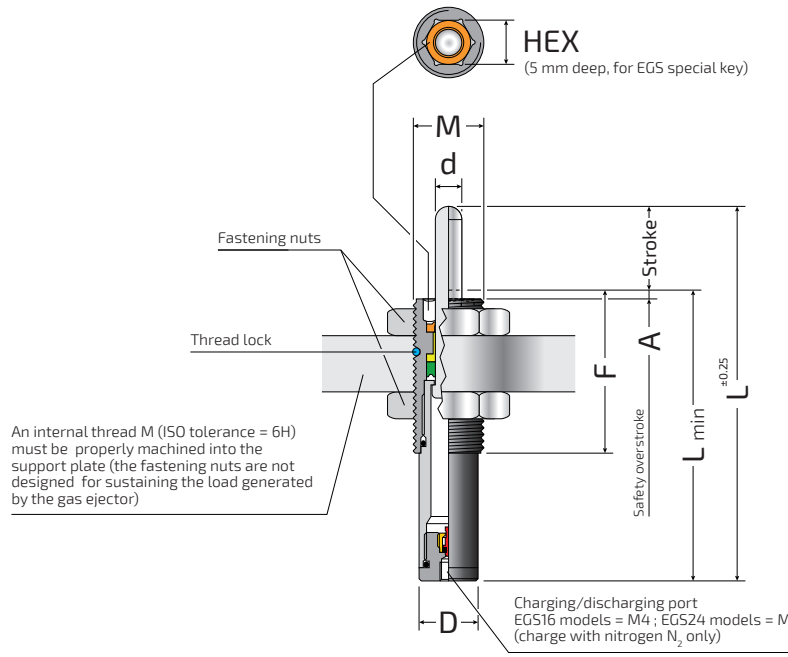

Nitrogen Gas Ejectors

EGS series nitrogen gas ejectors feature compact length and several standard forces to choose from. **EGS series** nitrogen gas ejectors are self-lubricated.

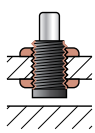

threaded hole on the die plate

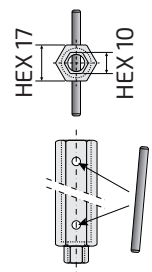

Special key for installation

Order Code: **EGS-CH**

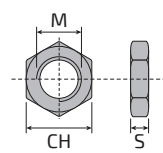

Order Code	Description	M	S	CH
EG-D-16	Fastening nut	M16 x 1.5	8	24
EG-D-16-2		M16 x 2	8	24
EG-D-24		M24 x 1.5	10	36

Springs

Safety Protections

UNCONTROLLED RETURN SPEED

OVERSTROKE

OVERPRESSURE

This gas spring series includes the models compliant with automotive standards

Ford	W-DX35-60M
VW	39D 549

Continued on the next page

EGS Nitrogen Gas Ejectors

Order Code	MAX Stroke	L min	L	M	F	A	d	D	HEX	bar (MPa)	daN	daN		Cycles per minute MAX	Gas volume Litres	Weight kg
EGS16x1.5-10-...	10	55	65	M16 x 1.5	35	1	6	13.5	10	See table below		x	1.51	300	0.001	0.05
20-...	20	65	85										1.60	150	0.002	0.06
30-...	30	75	105										1.63	100	0.003	0.07
40-...	40	85	125										1.65	75	0.003	0.07
50-...	50	95	145										1.66	60	0.004	0.08
60-...	60	105	165										1.67	50	0.005	0.08
70-...	70	115	185										1.68	45	0.006	0.09
80-...	80	125	205										1.68	40	0.007	0.10
100-...	100	145	245										1.69	30	0.008	0.11
125-...	125	170	295										1.70	25	0.010	0.12
EGS16x2-10-...	10	55	65	M16 x 2	35	1	6	13.5	10	See table below		x	1.51	300	0.001	0.05
20-...	20	65	85										1.60	150	0.002	0.06
30-...	30	75	105										1.63	100	0.003	0.07
40-...	40	85	125										1.65	75	0.003	0.07
50-...	50	95	145										1.66	60	0.004	0.08
60-...	60	105	165										1.67	50	0.005	0.08
70-...	70	115	185										1.68	45	0.006	0.09
80-...	80	125	205										1.68	40	0.007	0.10
100-...	100	145	245										1.69	30	0.008	0.11
125-...	125	170	295										1.70	25	0.010	0.12
EGS24x1.5-10-...	10	55	65	M24 x 1.5	35	1	12	21.5	17	See table below		x	1.74	300	0.003	0.16
20-...	20	65	85										1.85	150	0.006	0.18
30-...	30	75	105										1.89	100	0.008	0.20
40-...	40	85	125										1.92	75	0.011	0.23
50-...	50	95	145										1.93	60	0.013	0.25
60-...	60	105	165										1.94	50	0.016	0.27
70-...	70	115	185										1.95	45	0.018	0.29
80-...	80	125	205										1.96	40	0.021	0.30
100-...	100	145	245										1.97	30	0.026	0.33
125-...	125	170	295										1.97	25	0.032	0.35

All the gas ejector models in this table are in accordance with Article 4.3 of the 2014/68/EU Pressure Equipment Directive (PED)

Basic code	Force code	bar (MPa)	daN	daN	Label color	How to order
EGS16x1.5-...-	4	12 (1.2)	4	See table above	Purple	**EGS16x1.5-50-42** EGS nitrogen gas ejector with M16x1.5 threaded body,50 mm maximum available stroke length, 42 daN initial force (150 bar / 15.0 MPa charging pressure), yellow label. **EGS24x1.5-80-120** EGS nitrogen gas ejector with M24x1.5 threaded body,80 mm maximum available stroke length, 120 daN initial force (custom), black label.
	6	20 (2.0)	6		Green	
	11	40 (4.0)	11		Blue	
	21	75 (7.5)	21		Red	
	42	150 (15.0)	42		Yellow	
	(other)	10 (1.0)-150 (15.0)	3-42		Black	
EGS16x2-...-	4	12 (1.2)	4	See table above	Purple	
	6	20 (2.0)	6		Green	
	11	40 (4.0)	11		Blue	
	21	75 (7.5)	21		Red	
	42	150 (15.0)	42		Yellow	
	(other)	10 (1.0)-150 (15.0)	3-42		Black	
EGS24x1.5-...-	23	20 (2.0)	23	See table above	Green	
	45	40 (4.0)	45		Blue	
	85	75 (7.5)	85		Red	
	170	150 (15.0)	170		Yellow	
	(other)	10 (1.0)-150 (15.0)	11-170		Black	

ALL EGS MODELS ARE DISPOSABLE (REPAIR KIT NOT AVAILABLE)

VGS

PED in accordance with 2014/68/EU

VDI

VDI 3003 Part 2

ISO

ISO 11901-1

VGS 50 ~ 200

VGS series nitrogen gas springs feature standard dimensions for small diameters. With the VGS series nitrogen gas springs, Bordignon now ensures a great interchangeability and a superior reliability. VGS series nitrogen gas springs are self-lubricated.

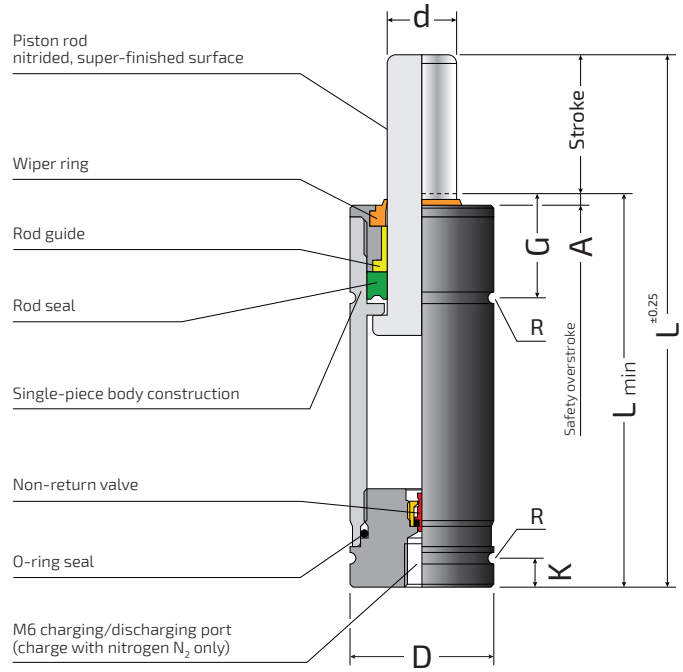

Gas spring base

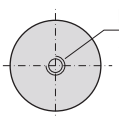

Ma
for charging / discharging for fixing

VGS50, VGS70, VGS90, VGS200

COMPACT POWER
COMPACT HEIGHT

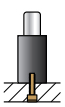

at the base with screw

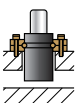

with collar flange - **FL**

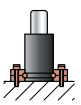

with collar flange (base)
FV for VGS90 only
FL for VGS200 only

All the gas ejector models in this table are in accordance with Article 4.3 of the 2014/68/EU Pressure Equipment Directive (PED)

Basic code	Force code	bar (MPa)	daN	daN	Label color		How to order
VGS50-...-	13	45 (4.5)	13	See table on the right page		Green	VGS90-50-90 VGS nitrogen gas spring with 19 mm body diameter, 50 mm maximum available stroke length, 90 daN initial force (180 bar 18.0 MPa charging pressure), yellow label. VGS200-80-175 VGS nitrogen gas spring with 25 mm body diameter, 80 mm maximum available stroke length, 175 daN initial force (custom), black label.
	25	90 (9.0)	25			Blue	
	38	135 (13.5)	38			Red	
	50	180 (18.0)	50			Yellow	
	(other)	20 (2.0)-180 (18.0)	6-50			Black	
VGS70-...-	18	45 (4.5)	18	See table on the right page		Green	
	35	90 (9.0)	35			Blue	
	50	135 (13.5)	50			Red	
	70	180 (18.0)	70			Yellow	
	(other)	20 (2.0)-180 (18.0)	8-70			Black	
VGS90-...-	5	10 (1.0)	5	See table on the right page		Orange	
	10	20 (2.0)	10			Purple	
	30	60 (6.0)	30			Green	
	50	100 (10.0)	50			Blue	
	70	140 (14.0)	70			Red	
	90	180 (18.0)	90			Yellow	
	(other)	10 (1.0)-180 (18.0)	5-90			Black	
VGS200-...-	17	15 (1.5)	17	See table on the right page		Orange	
	28	25 (2.5)	28			Purple	
	50	45 (4.5)	50			Green	
	100	90 (9.0)	100			Blue	
	150	135 (13.5)	150			Red	
	200	180 (18.0)	200			Yellow	
	(other)	10 (1.0)-180 (18.0)	11-200			Black	

TABLE 1

Safety Protections

UNCONTROLLED RETURN SPEED

OVERSTROKE

OVERPRESSURE

This gas spring series includes the models compliant with automotive standards

BMW	B2 4007	**PSA**	E24.54.815.G
FCA	075.90.50	**Renault**	EM24.54.700
MB	B8 3180 220 000 002	**VW**	39D 878
Nissan	K32D2-2400-50		

Continued on the next page →

VGS 50 ~ 200

Order Code	MAX Stroke	L min	L	D	d	G	A	R	K	Ma	bar (MPa)	daN	daN	Cycles per minute MAX	Gas volume Litres	Weight kg
VGS50-07-...	7	49	56	12 ±0.1	6	17	1	0.8	-	M6 x 6	See Table 1 on the left page	x	1.50	300	0.001	0.03
10-...	10	52	62										1.50	300	0.001	0.03
13-...	12.7	54.7	67.4										1.60	235	0.001	0.03
15-...	15	57	72										1.60	200	0.001	0.03
19-...	19	61	80										1.70	160	0.002	0.03
25-...	25	67	92										1.70	120	0.002	0.03
38-...	38	80	118										1.80	80	0.003	0.04
50-...	50	92	142										1.80	60	0.004	0.05
63-...	63.5	108.5	172										1.80	50	0.005	0.06
75-...	75	120	195										1.80	40	0.005	0.06
80-...	80	125	205										1.80	40	0.006	0.07
100-...	100	145	245										1.90	30	0.007	0.08
125-...	125	170	295										1.90	25	0.008	0.09
VGS70-07-...	7	49	56	15 ±0.1	7	17	1	0.8	-	M6 x 6	See Table 1 on the left page	x	1.43	300	0.001	0.04
10-...	10	52	62										1.50	300	0.001	0.05
13-...	12.7	54.7	67.4										1.50	235	0.002	0.05
15-...	15	57	72										1.57	200	0.002	0.05
19-...	19	61	80										1.57	160	0.002	0.05
25-...	25	67	92										1.64	120	0.003	0.06
38-...	38.1	80.1	118.2										1.71	80	0.004	0.07
50-...	50	92	142										1.71	60	0.005	0.08
63-...	63.5	108.5	172										1.71	50	0.007	0.09
75-...	75	120	195										1.71	40	0.008	0.10
80-...	80	125	205										1.71	40	0.008	0.10
100-...	100	145	245										1.79	30	0.010	0.12
125-...	125	170	295										1.79	25	0.013	0.14
VGS90-07-...	7	49	56	19 +0/-0.3	8	17	1	1	6	M6 x 8	See Table 1 on the left page	x	1.39	300	0.002	0.07
10-...	10	52	62										1.39	300	0.002	0.07
13-...	12.7	54.7	67.4										1.44	235	0.003	0.08
15-...	15	57	72										1.44	200	0.003	0.08
25-...	25	67	92										1.50	120	0.005	0.09
38-...	38.1	80.1	118.2										1.50	80	0.007	0.11
50-...	50	92	142										1.50	60	0.009	0.12
63-...	63.5	108.5	172										1.50	50	0.012	0.14
80-...	80	125	205										1.50	40	0.015	0.15
100-...	100	145	245										1.50	30	0.019	0.17
125-...	125	170	295										1.50	25	0.023	0.20
VGS200-07-...	7	49	56	25 +0/-0.3	12	17	1	1	5	M6 x 9	See Table 1 on the left page	x	1.43	300	0.004	0.12
10-...	10	52	62										1.48	300	0.005	0.13
13-...	12.7	54.7	67.4										1.50	235	0.006	0.13
15-...	15	57	72										1.53	200	0.006	0.14
16-...	16	58	74										1.53	190	0.007	0.14
25-...	25	67	92										1.55	120	0.010	0.16
38-...	38.1	80.1	118.2										1.60	80	0.014	0.19
50-...	50	92	142										1.60	60	0.018	0.20
63-...	63.5	108.5	172										1.60	50	0.024	0.23
80-...	80	125	205										1.60	40	0.029	0.26
100-...	100	145	245										1.60	30	0.036	0.30
125-...	125	170	295										1.63	25	0.044	0.34

REPAIR KIT

VGS50-... and VGS70-... MODELS ARE DISPOSABLE
(REPAIR KIT NOT AVAILABLE)

Gas Spring Code	Repair Kit Code
VGS90 - ...	KR / VGS 90
VGS200 - ...	KR / VGS 200

AGS

PED in accordance with 2014/68/EU

VDI

VDI 3003 Part 3

ISO

ISO 11901-3

AGS 170 ~ 320

AGS series nitrogen gas springs are highly appreciated in the automotive industry thanks to the compact dimensions, the fixing and linking possibilities. With the AGS series nitrogen gas springs, Bordignon now ensures a great interchangeability and a superior reliability. AGS series nitrogen gas springs are self-lubricated.

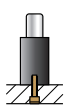

at the base with screw

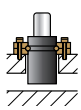

with collar flange - **FL**

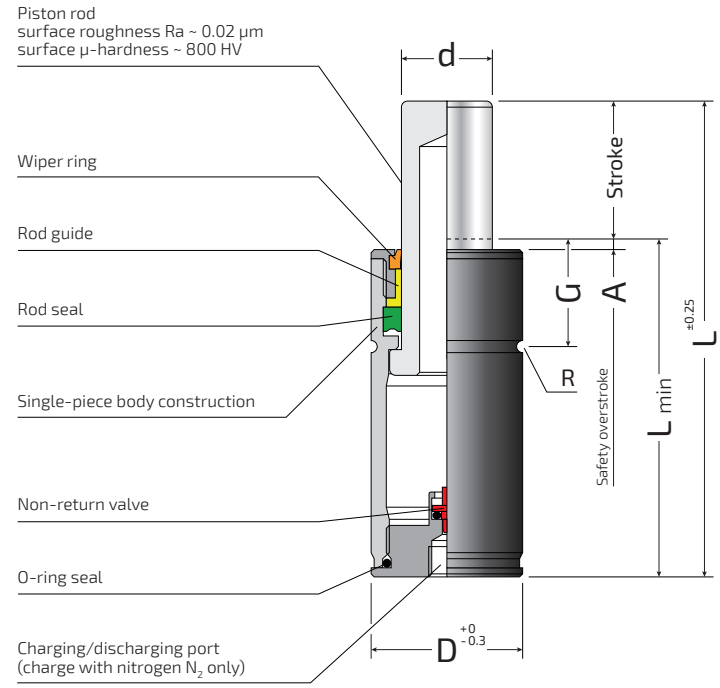

COMPACT POWER

COMPACT HEIGHT

Gas spring base

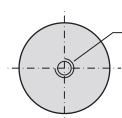

Ma

for charging / discharging for fixing

AGS170, AGS320

Springs

Safety Protections

UNCONTROLLED RETURN SPEED — OVERSTROKE — OVERPRESSURE

This gas spring series includes the models compliant with automotive standards

BMW	B2 4005	**MB**	B8 3180 220 000 004
FCA	075.90.60	**VW**	39D 997

Continued on the next page →

AGS 170 ~ 320

Order Code	MAX Stroke	L min	L	D	d	G	A	R	Ma	bar (MPa)	daN	daN	Cycles per minute max	Gas volume Litres	Weight kg
AGS170-07-A	7	37	44	19	11	17	1	1	M6 x 5	180 (18.0)	170	290	300	0.002	0.06
10-A	10	40	50									295	300	0.003	0.06
13-A	13	43	56									300	230	0.003	0.07
15-A	15	45	60									310	200	0.004	0.07
19-A	19	49	68									320	160	0.005	0.08
25-A	25	55	80									330	120	0.006	0.08
32-A	32	62	94									340	90	0.007	0.09
38-A	38	68	106									340	80	0.009	0.10
50-A	50	80	130									350	60	0.011	0.12
63-A	63	93	156									355	50	0.014	0.14
75-A	75	110	185									360	40	0.017	0.16
80-A	80	115	195									360	40	0.018	0.16
100-A	100	135	235									360	30	0.023	0.19
125-A	125	160	285									360	25	0.028	0.23
AGS320-07-A	7	37	44	25	15	17	1	1	M6 x 5	180 (18.0)	320	490	300	0.004	0.10
10-A	10	40	50									490	300	0.005	0.11
13-A	13	43	56									550	230	0.006	0.12
15-A	15	45	60									550	200	0.007	0.12
19-A	19	49	68									580	160	0.008	0.13
25-A	25	55	80									600	120	0.011	0.14
32-A	32	62	94									630	90	0.013	0.16
38-A	38	68	106									640	80	0.015	0.17
50-A	50	80	130									640	60	0.020	0.20
63-A	63	93	156									640	50	0.025	0.23
75-A	75	110	185									640	40	0.031	0.26
80-A	80	115	195									640	40	0.033	0.27
100-A	100	135	235									650	30	0.040	0.32
125-A	125	160	285									660	25	0.050	0.38

All the gas ejector models in this table are in accordance with Article 4.3 of the 2014/68/EU Pressure Equipment Directive (PED)

REPAIR KIT

Gas Spring Code	Repair Kit Code
AGS170-...-A	KR / AGS170-A
AGS320-...-A	KR / AGS320-A

Gas Spring Accessories Accessories for fixing, charging/discharging, linking to open system, etc. can be found in this catalogue further on.
ATTENTION: use Bordignon nitrogen gas springs with Bordignon accessories only.

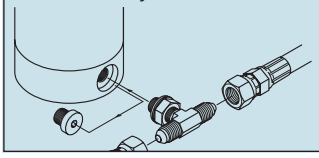

2D & 3D Technical drawings
Download various 2D & 3D file formats from
www.guvenal.net

AGS

PED in accordance with 2014/68/EU

VDI

VDI 3003 Part 3

ISO

ISO 11901-3

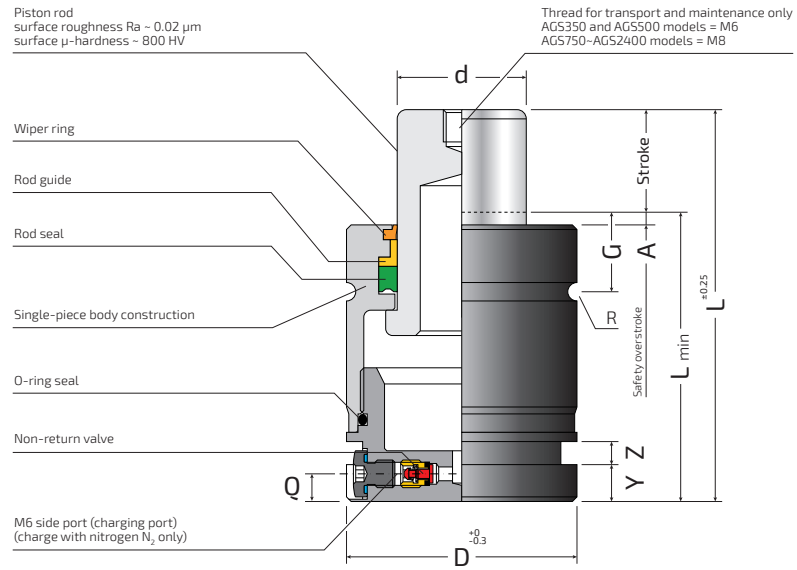

AGS 320 ~ 2400

AGS series nitrogen gas springs are highly appreciated in the automotive industry thanks to the compact dimensions, the fixing and linking possibilities. With the AGS series nitrogen gas springs, Bordignon now ensures a great interchangeability and a superior reliability.
AGS series nitrogen gas springs are self-lubricated.

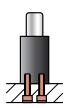

at the base with screws

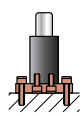

with base-plate
BF, BFA, BFB for AGS750 ~ AGS2400

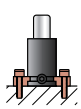

with half-flanges
SF, SFA

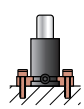

with foot brackets
ST, STA for AGS500 ~ AGS2400

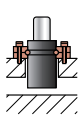

with collar flange
FL, FLQ

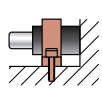

with front support
FT, FTA
(Not for all AGS models)

COMPACT POWER — COMPACT HEIGHT

Gas spring base

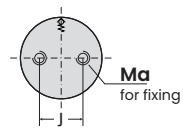

AGS350
AGS750, AGS1000

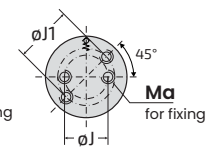

AGS500

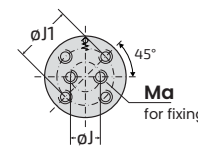

AGS1500

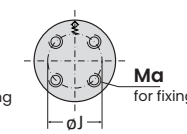

AGS2400

Linking To Open System

AGS 320 ~ 2400 - (M6 side port)

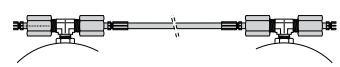

HOSES	ATM	ATNM
Gas Spring- Hose fittings	ARM	ARNM

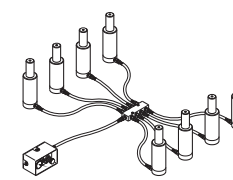

ATTENTION! Follow the instructions in the "LINKED SYSTEM" section before connecting the gas springs.

Linking To "OV SYSTEM"

AGS350~AGS2400 models are also available as "OV-version" (without valve, for direct connection to alternative manifold system).

See dedicated catalogue section.

Safety Protections

UNCONTROLLED RETURN SPEED

OVERSTROKE

OVERPRESSURE

This gas spring series includes the models compliant with automotive standards

BMW	B2 4005	**Nissan**	K 32 H
FCA	075.90.60	**PSA**	E24.54.815.G
Ford	W-DX35-6204	**VW**	39D 997
MB	B8 3180 220 000 004		

Continued on the next page →

AGS 350 ~ 2400

Order Code	MAX Stroke	L min	L	D	d	G	A	R	Y	Z	Q	Ma	J	J1	bar (MPa)	daN	daN	Cycles per minute MAX	Gas volume Litres	Weight kg
AGS350-10-A	10	40	50														570	300	0.006	0.19
13-A	13	43	56														570	230	0.007	0.20
16-A	16	46	62														580	190	0.009	0.21
19-A	19	49	68														580	160	0.011	0.22
25-A	25	55	80														580	120	0.015	0.24
32-A	32	62	94														590	90	0.019	0.26
38-A	38	68	106	32	16	12.5	2	1	4	4	6	M6 x 6 (2x)	20	-	180 (18.0)	360	590	80	0.022	0.28
50-A	50	80	130														590	60	0.029	0.32
63-A	63	93	156														590	50	0.037	0.36
75-A	75	105	180														590	40	0.044	0.40
80-A	80	110	190														590	40	0.047	0.42
100-A	100	130	230														590	30	0.059	0.49
125-A	125	155	280														610	25	0.074	0.58
AGS500-10-A	10	40	50														720	300	0.009	0.26
13-A	13	43	56														720	230	0.012	0.28
16-A	16	46	62														730	190	0.014	0.29
19-A	19	49	68														730	160	0.017	0.30
25-A	25	55	80														740	120	0.023	0.32
32-A	32	62	94														740	90	0.029	0.35
38-A	38	68	106	38	20	12.5	2	1	4	4	6	M6 x 6 (2x or 2x) *(2x o 2x)*	20	25	150 (15.0)	470	740	80	0.035	0.38
50-A	50	80	130														750	60	0.046	0.43
63-A	63	93	156														750	50	0.059	0.48
75-A	75	105	180														750	40	0.070	0.52
80-A	80	110	190														750	40	0.075	0.55
100-A	100	130	230														750	30	0.094	0.63
125-A	125	155	280														760	25	0.117	0.73
AGS750-10-A	10	42	52														1200	300	0.013	0.40
13-A	13	45	58														1230	230	0.017	0.42
16-A	16	48	64														1230	190	0.021	0.44
19-A	19	51	70														1250	160	0.025	0.45
25-A	25	57	82														1250	120	0.033	0.49
32-A	32	64	96														1250	90	0.042	0.53
38-A	38	70	108	45	25	16.5	2	1	4	4	6	M8 x 6 (2x)	20	-	150 (15.0)	740	1250	80	0.050	0.57
50-A	50	82	132														1250	60	0.066	0.64
63-A	63	95	158														1260	50	0.084	0.72
75-A	75	107	182														1260	40	0.100	0.79
80-A	80	112	192														1260	40	0.106	0.82
100-A	100	132	232														1260	30	0.133	0.95
125-A	125	157	282														1260	25	0.167	1.10
AGS1000-13-A	13	51	64														1540	230	0.02	0.57
16-A	16	54	70														1540	190	0.03	0.59
19-A	19	57	76														1560	160	0.03	0.61
25-A	25	63	88														1580	120	0.04	0.66
32-A	32	70	102														1580	90	0.05	0.71
38-A	38	76	114														1580	80	0.06	0.75
50-A	50	88	138	50	28	17.5	3	2	8	5	6	M8 x 6 (2x)	20	-	150 (15.0)	920	1580	60	0.08	0.84
63-A	63	101	164														1580	50	0.11	0.93
75-A	75	113	188														1580	40	0.13	1.02
80-A	80	118	198														1580	40	0.13	1.06
100-A	100	138	238														1600	30	0.17	1.21
125-A	125	163	288														1600	25	0.21	1.40
AGS1500-10-A	10	54	64														2220	300	0.03	0.96
13-A	13	57	70														2280	230	0.04	0.99
16-A	16	60	76														2300	190	0.05	1.02
19-A	19	63	82														2350	160	0.06	1.06
25-A	25	69	94														2390	120	0.08	1.12
32-A	32	76	108														2450	90	0.10	1.20
38-A	38	82	120	63	36	19	3	2	8	5	6	M8 x 6 (2x or 4x) *(2x o 4x)*	20	40	150 (15.0)	1530	2450	80	0.11	1.26
50-A	50	94	144														2500	60	0.15	1.39
63-A	63	107	170														2510	50	0.18	1.52
75-A	75	119	194														2530	40	0.22	1.65
80-A	80	124	204														2550	40	0.23	1.71
100-A	100	144	244														2580	30	0.29	1.92
125-A	125	169	294														2640	25	0.35	2.24
AGS2400-16-A	16	61	77														3800	190	0.07	1.54
19-A	19	64	83														3850	160	0.08	1.58
25-A	25	70	95														3900	120	0.11	1.68
32-A	32	77	109														4000	90	0.14	1.79
38-A	38	83	121														4050	80	0.16	1.89
50-A	50	95	145	75	45	21	3	2.5	8	5	6	M8 x 6 (4x)	40	-	150 (15.0)	2385	4100	60	0.21	2.09
63-A	63	108	171														4100	50	0.26	2.30
75-A	75	120	195														4150	40	0.31	2.49
80-A	80	125	205														4200	40	0.33	2.57
100-A	100	145	245														4200	30	0.41	2.90
125-A	125	170	295														4200	25	0.51	3.28

REPAIR KIT All the gas ejector models in this table are in accordance with Article 4.3 of the 2014/68/EU Pressure Equipment Directive (PED)

Gas Spring Code	Repair Kit Code
AGS350-...-A	KR / AGS350-A
AGS500-...-A	KR / AGS500-A
AGS750-...-A	KR / AGS750-A

Gas Spring Code	Repair Kit Code
AGS1000-...-A	KR / AGS1000-A
AGS1500-...-A	KR / AGS1500-A
AGS2400-...-A	KR / AGS2400-A

"L-VERSION" (FOR LINKED SYSTEM)

When the AGS gas springs are to be used in a linked system, make sure to order the "L-version" by adding "-L" after the gas spring code. The "L-version" gas springs are supplied already discharged and without valve, ready for the connection to linked system.
Example: "**AGS1000-50-A-L**"

AGS

PED in accordance with 2014/68/EU

VDI

VDI 3003 Part 3

ISO

ISO 11901-3

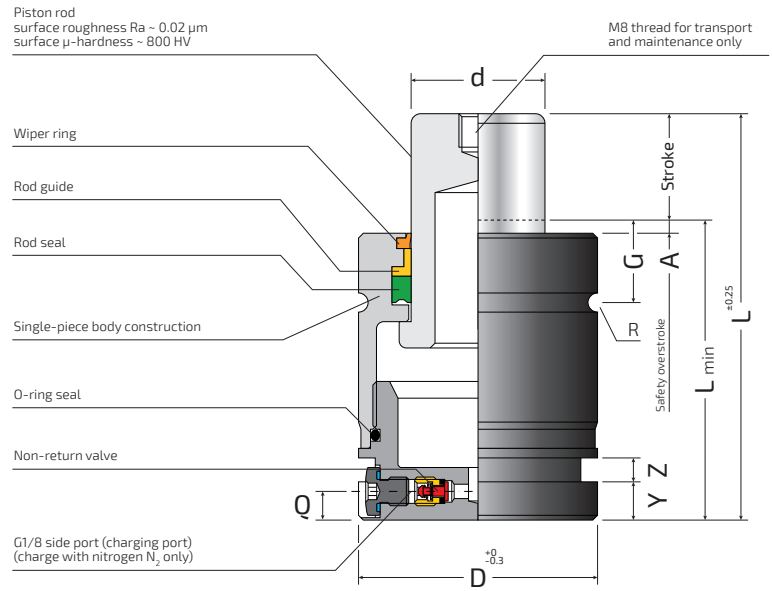

COMPACT POWER COMPACT HEIGHT

AGS 4200 ~ 20000

AGS series nitrogen gas springs are highly appreciated in the automotive industry thanks to the compact dimensions, the fixing and linking possibilities. With the AGS series nitrogen gas springs, Bordignon now ensures a great interchangeability and a superior reliability. AGS series nitrogen gas springs are self-lubricated.

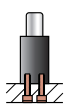

at the base with screws

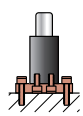

with base-plate
BF, BFA, BFB

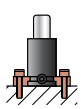

with half-flanges
SF, SFA

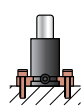

with foot brackets
ST, STA

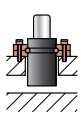

with collar flange
FL, FLQ

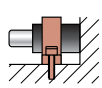

with front support
FT, FTA
(Not for all AGS models)

Gas spring base

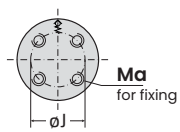

AGS 4200 ~ 20000

Linking To Open System

AGS 4200 ~ 20000 - (G1/8 side port)

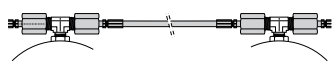

HOSES	ATM	ATN	AT
Gas Spring- Hose fittings	ARM	ARN	AR

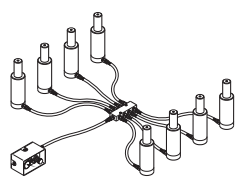

ATTENTION! Follow the instructions in the "LINKED SYSTEM" section before connecting the gas springs.

Linking To "OV SYSTEM"

AGS4200~AGS20000 models are also available as "OV-version" (without valve, for direct connection to alternative manifold system).
See dedicated catalogue section.

Safety Protections

UNCONTROLLED RETURN SPEED

OVERSTROKE

OVERPRESSURE

This gas spring series includes the models compliant with automotive standards

BMW	B2 4005	**MB**	B8 3180 220 000 004
FCA	075.90.60	**Nissan**	K 32 H
Ford	W-DX35-6204	**PSA**	E24.54.815.G
Mazda	PG 24D	**VW**	39D 997

Continued on the next page →

AGS 4200 ~ 20000

Order Code	MAX Stroke	L min	L	D	d	G	A	R	Y	Z	Q	Ma	J	bar (MPa)	daN	daN	Cycles per minute MAX	Gas volume Litres	Weight kg
AGS4200-16-A	16	74	90													6800	190	0.13	3.13
19-A	19	77	96													6800	160	0.15	3.21
25-A	25	83	108													7000	120	0.19	3.37
32-A	32	90	122													7300	90	0.24	3.55
38-A	38	96	134													7300	80	0.28	3.69
50-A	50	108	158	95	60	24	3	2.5	8	5	10.5	M8 x 12 (4x)	60	150 (15.0)	4240	7500	60	0.36	3.98
63-A	63	121	184													7500	50	0.45	4.30
75-A	75	133	208													7600	40	0.54	4.59
80-A	80	138	218													7700	40	0.57	4.72
100-A	100	158	258													7800	30	0.71	5.22
125-A	125	183	308													7900	25	0.88	5.85
AGS6600-16-A	16	84	100													9400	190	0.22	5.67
19-A	19	87	106													9600	160	0.25	5.81
25-A	25	93	118													10100	120	0.31	6.08
32-A	32	100	132													10400	90	0.38	6.39
38-A	38	106	144													10500	80	0.44	6.66
50-A	50	118	168	120	75	25.5	3	2.5	8	5	10.5	M10 x 12 (4x)	80	150 (15.0)	6630	10700	60	0.56	7.21
63-A	63	131	194													11200	50	0.69	7.79
75-A	75	143	218													11300	40	0.81	8.32
80-A	80	148	228													11300	40	0.86	8.53
100-A	CE 100	168	268													11400	30	1.07	9.45
125-A	CE 125	193	318													11500	25	1.32	10.57
AGS9500-19-A	19	97	116													16000	160	0.35	10.85
25-A	25	103	128													16300	120	0.45	11.23
32-A	32	110	142													16500	90	0.56	11.69
38-A	38	116	154													16600	80	0.65	12.06
50-A	50	128	178													16800	60	0.85	12.84
63-A	CE 63	141	204	150	90	27.5	3	2.5	8	5	10.5	M10 x 16 (4x)	100	150 (15.0)	9540	17000	50	1.05	13.67
75-A	CE 75	153	228													17000	40	1.24	14.45
80-A	CE 80	158	238													17100	40	1.32	14.77
100-A	CE 100	178	278													17100	30	1.64	16.05
125-A	CE 125	203	328													17200	25	2.04	17.67
AGS20000-19-A	19	129	148													30400	160	0.90	23.29
25-A	CE 25	135	160													31600	120	1.08	23.92
32-A	CE 32	142	174													32600	90	1.29	24.66
38-A	CE 38	148	186													33300	80	1.47	25.30
50-A	CE 50	160	210													34400	60	1.83	26.55
63-A	CE 63	173	236	195	130	33.5	3	2.5	8	8	15	M12 x 18 (4x)	120	150 (15.0)	19910	35100	50	2.22	27.91
75-A	CE 75	185	260													35600	40	2.58	29.17
80-A	CE 80	190	270													35800	40	2.73	29.69
100-A	CE 100	210	310													36400	30	3.33	31.80
125-A	CE 125	235	360													36900	25	4.08	34.42

CE

The gas spring models for which the CE symbol is indicated have an internal gas volume > 1 litr e. They fall into Category II of the 2014/68/EU Pressure Equipment Dir ective (PED).

All the gas ejector models in this table ar e in accor dance with Article 4.3 of the 2014/68/EU Pr essure Equipment Dir ective (PED)

REPAIR KIT

Gas Spring Code	Repair Kit Code
AGS4200-...-A	KR / AGS4200-A
AGS6600-...-A	KR / AGS6600-A
AGS9500-...-A	KR / AGS9500-A
AGS20000-...-A	KR / AGS20000-A

TGS

PED in accordance with 2014/68/EU

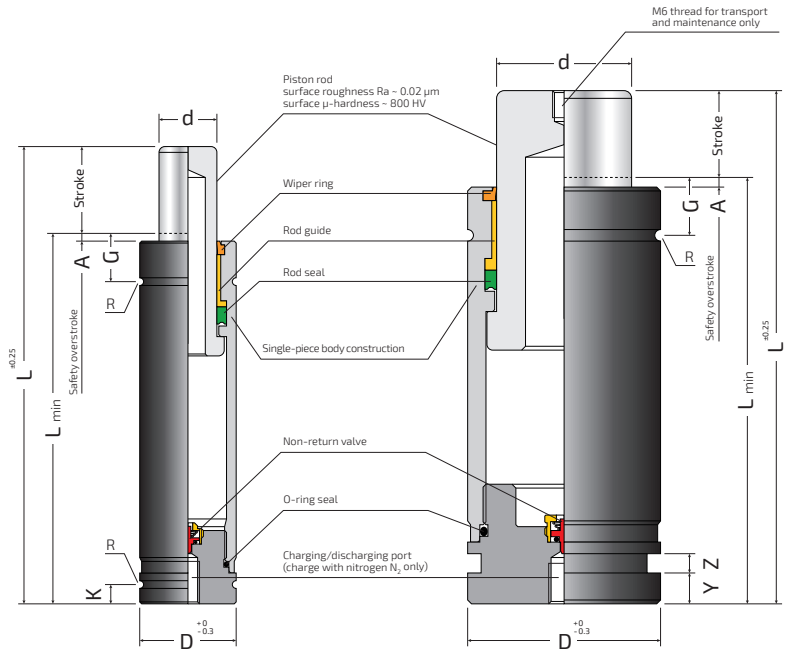

TGS 400 ~ 12000

TGS series nitrogen gas springs feature high forces and compact diameters in a rod seal design. They ensure a great interchangeability (forces, dimensions and fixing possibilities) with the bore seal design nitrogen gas springs commonly available on the market, offering a higher performance (high number of cycles per minute, self-lubrication, better protection against liquid contaminants) and reliability thanks to the rod seal design. TGS series nitrogen gas springs are self-lubricated.

COMPACT POWER

COMPACT HEIGHT

Gas spring base

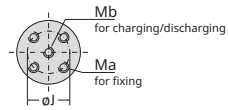

TGS5000, TGS8000, TGS12000

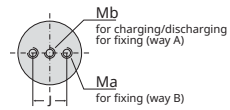

TGS700, TGS1000, TGS2000, TGS3000

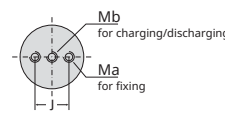

TGS400

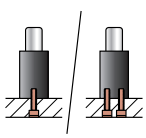

at the base
with screw(s)

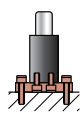

with base-plate
BF, BFA, BFB for TGS5000 only

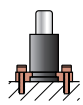

with half-flanges
SF, SFA for TGS700~TGS12000

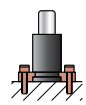

with foot brackets
ST, STA for TGS1000~TGS12000

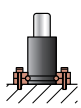

with collar flange (base)
FL for TGS400 only

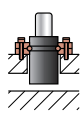

with collar flange
FL, FLA, FLQ, FLQA

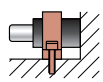

with front support
FT, FTA (Not for all AGS models)

Springs

Safety Protections

UNCONTROLLED RETURN SPEED

OVERSTROKE

OVERPRESSURE

Continued on the next page →

TGS 400 ~ 12000

Order Code	MAX Stroke	L min	L	D	d	G	A	R	K	Y	Z	Ma	J	Mb	bar (MPa)	daN	daN	Cycles per minute MAX	Gas volume Litres	Weight kg
TGS400-10-A	10	60	70	25	15	11.5	1	1	5	-	-	M5 x 6 (2x)	14	M6 x 11	204 (20.4)	360	510	300	0.006	0.18
16-A	16	75	91			11.5		1		-	-						510	190	0.011	0.20
25-A	25	95	120			11.5		1		-	-						520	120	0.018	0.24
32-A	32	108	140			11.5		1		-	-						520	90	0.022	0.26
40-A	40	125	165			11.5		1		-	-						530	75	0.028	0.30
50-A	50	145	195			11.5		1		-	-						530	60	0.035	0.33
TGS700-06-A	● 6	57	63	32	20	11.5	2	1	-	-	-	M6 x 8 (2x)	15	M4	210 (21.0)	660	840	300	0.008	0.27
10-A	● 10	65	75			11.5		1		-	-						870	300	0.014	0.29
16-A	16	77	93			11.5		1		4	3.5						940	190	0.018	0.33
25-A	25	95	120			11.5		1		4	3.5						950	120	0.030	0.38
32-A	32	108	140			11.5		1		4	3.5						950	90	0.038	0.42
40-A	40	125	165			11.5		1		4	3.5						960	75	0.049	0.46
50-A	50	145	195			11.5		1		4	3.5						960	60	0.062	0.51
TGS1000-06-A	● 6	55	61	38	25	10.5	2	1	-	-	-	M6 x 8 (2x)	17	M8	205 (20.5)	1000	1350	300	0.010	0.38
10-A	10	68	78			10.5		1		4	3.5						1400	300	0.016	0.46
16-A	16	84	100			10.5		1		4	3.5						1400	190	0.028	0.52
25-A	25	110	135			10.5		1		4	3.5						1400	120	0.049	0.63
32-A	32	135	167			10.5		1		4	3.5						1450	90	0.068	0.73
40-A	40	155	195			10.5		1		4	3.5						1450	75	0.084	0.81
50-A	50	180	230			10.5		1		4	3.5						1450	60	0.104	0.92
TGS2000-06-A	●● 6	60	66	50	35	-	2	-	-	-	-	M6 x 8 (2x)	26	M8	209 (20.9)	2000	3000	300	0.02	0.74
10-A	●● 10	70	80			-		-		-	-						3100	300	0.03	0.82
16-A	● 16	90	106			14.5		1.5		-	-						3200	190	0.05	1.02
25-A	25	110	135			14.5		1.5		8	5						3300	120	0.07	1.25
32-A	32	130	162			14.5		1.5		8	5						3400	90	0.10	1.39
40-A	40	150	190			14.5		1.5		8	5						3400	75	0.12	1.54
50-A	50	170	220			14.5		1.5		8	5						3400	60	0.15	1.70
65-A	65	206	271			14.5		1.5		8	5						3200	45	0.20	1.99
TGS3000-10-A	●● 10	75	85	63	45	-	2	-	-	-	-	M8 x 12 (2x)	34	M8	189 (18.9)	3000	4600	300	0.05	1.45
16-A	● 16	87	103			19		2		-	-						5000	190	0.07	1.62
25-A	25	105	130			19		2		8	5						5200	120	0.10	1.91
32-A	32	118	150			19		2		8	5						5200	90	0.14	2.07
40-A	40	135	175			19		2		8	5						5300	75	0.18	2.27
50-A	50	155	205			19		2		8	5						5300	60	0.23	2.52
65-A	65	191	256			19		2		8	5						5000	45	0.31	2.97
TGS5000-10-A	●● 10	70	80	75	58	-	2	-	-	-	-	M8 x 12 (4x)	40	M8	190 (19.0)	5000	7400	300	0.08	1.87
16-A	● 16	90	106			18		1.5		-	-						7400	190	0.12	2.33
25-A	25	110	135			18		1.5		8	5						7600	120	0.18	2.74
32-A	32	135	167			18		1.5		8	5						7600	90	0.27	3.05
40-A	40	160	200			18		1.5		8	5						7600	75	0.36	3.38
50-A	50	190	240			18		1.5		8	5						7200	60	0.47	3.78
65-A	65	208	273			18		1.5		8	5						8000	45	0.55	4.12
TGS8000-10-A	●● 10	80	90	95	75	-	2	-	-	-	-	M8 x 12 (4x)	52	M8	182 (18.2)	8000	10500	300	0.17	3.29
16-A	● 16	100	116			21		1.5		-	-						10800	190	0.25	3.94
25-A	25	120	145			21		1.5		8	5						11500	120	0.36	4.50
32-A	32	150	182			21		1.5		8	5						11500	90	0.54	5.05
40-A	40	170	210			21		1.5		8	5						11600	75	0.66	5.46
50-A	50	205	255			21		1.5		8	5						11600	60	0.88	6.14
65-A	65	214	279			21		1.5		8	5						12500	45	0.96	6.46
TGS12000-10-A	●● 10	90	100	120	90	-	2	-	-	-	-	M10 x 15 (4x)	68	M8	189 (18.9)	12000	15500	300	0.25	6.22
16-A	● 16	110	126			22.5		2.5		-	-						16500	190	0.35	7.45
25-A	25	130	155			22.5		2.5		8	5						17000	120	0.49	8.59
32-A	32	155	187			22.5		2.5		8	5						17000	90	0.70	9.48
40-A	40	180	220			22.5		2.5		8	5						17000	75	0.92	10.41
50-A	CE 50	210	260			22.5		2.5		8	5						16500	60	1.19	11.52
65-A	CE 65	255	320			22.5		2.5		8	5						18000	45	1.59	13.27

CE

The gas spring models for which the CE symbol is indicated have an internal gas volume > 1 litr e. They fall into Category II of the 2014/68/EU Pressure Equipment Dir ective (PED).

All the gas ejector models in this table ar e in accor dance with Article 4.3 of the 2014/68/EU Pr essure Equipment Dir ective (PED)

REPAIR KIT

Gas Spring Code	Repair Kit Code
TGS400-...-A	KR / TGS400-A
TGS700-...-A	KR / TGS700-A
TGS1000-...-A	KR / TGS1000-A
TGS2000-...-A	KR / TGS2000-A

Gas Spring Code	Repair Kit Code
TGS3000-...-A	KR / TGS3000-A
TGS5000-...-A	KR / TGS5000-A
TGS8000-...-A	KR / TGS8000-A
TGS12000-...-A	KR / TGS12000-A

● Without lo wer (squar e) gr oove

● Without upper (r ound) gr oove

IGS

PED in accordance with 2014/68/EU

VDI

VDI 3003

ISO

ISO 11901-1

IGS 150 ~ 1500

IGS series nitrogen gas springs feature standard dimensions and forces, as well as several fixing and linking possibilities. With the IGS series nitrogen gas springs, Bordignon now ensures a great interchangeability and a superior reliability. IGS series nitrogen gas springs are self-lubricated.

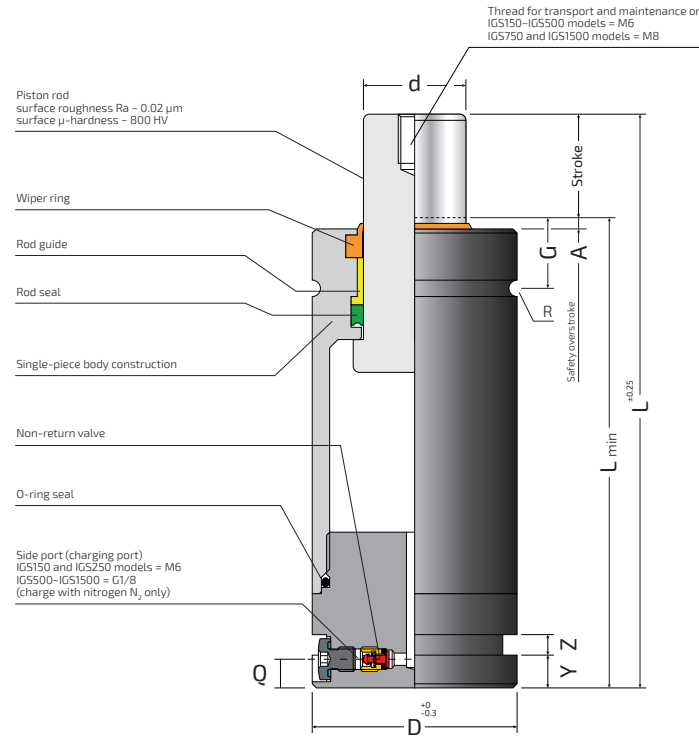

COMPACT POWER

COMPACT HEIGHT

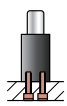

at the base
with screws

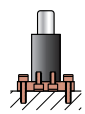

with base-plate
BF, BFA, BFB for IGS500 ~ IGS1500

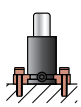

with
half-flanges
SF, SFA

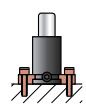

with foot brackets
ST, STA for IGS250 ~ IGS1500

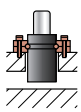

with collar flange
FL, FLQ

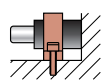

with front support
FT, FTA

Gas spring base

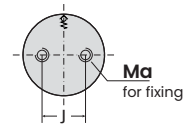

IGS150,IGS500
IGS750

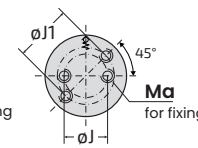

IGS250

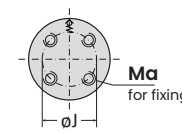

IGS1500

Linking To Open System

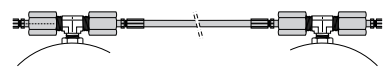

IGS150 ~ IGS250 - (M6 side port)

HOSES	ATM	ATNM
Gas Spring- Hose fittings	ARM	ARNM

IGS500 ~ IGS1500 - (G1/8 side port)

HOSES	ATM	ATN
Gas Spring- Hose fittings	ARM	ARN

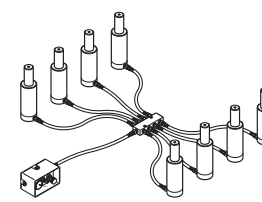

ATTENTION! Follow the instructions in the "LINKED SYSTEM" section before connecting the gas springs.

Springs

Safety Protections

UNCONTROLLED RETURN SPEED

OVERSTROKE

OVERPRESSURE

This gas spring series includes the models compliant with automotive standards

BMW	B2 4006	**Nissan**	K 32 S
FCA	075.90.55	**PSA**	E24.54.815.G
Ford	W-DX35-6203	**Renault**	EM24.54.700
Mazda	PG23D	**Suzuki**	SES-K 5404e
MB	B8 3180 220 000 001	**VW**	39D 878

Continued on the next page →

IGS 150 ~ 1500

Order Code	MAX Stroke	L min	L	D	d	G	A	R	Y	Z	Q	Ma	J	J1	bar (MPa)	daN	daN	Cycles per minute MAX	Gas volume Litres	Weight kg
IGS150-10	10	60	70	32	12	12.5	2	1	4	4	6	M6 x 11 (2x)	18	-	150 (15.0)	170	215	300	0.009	0.30
13	12.7	62.7	75.4														220	235	0.010	0.32
16	16	66	82														220	190	0.012	0.33
25	25	75	100														225	120	0.017	0.36
38	38.1	88.1	126.2														230	80	0.024	0.39
50	50	100	150														230	60	0.030	0.44
63	63.5	113.5	177														230	50	0.037	0.48
80	80	130	210														235	40	0.046	0.54
100	100	150	250														235	30	0.057	0.60
125	125	175	300														235	25	0.070	0.70
IGS250-10	10	60	70	38	15	12.5	2	1	4	4	6	M6 x 9 (2x or 2x) *(2x o 2x)*	18	25	150 (15.0)	260	305	300	0.029	0.30
13	12.7	62.7	75.4														310	235	0.031	0.31
16	16	66	82														310	190	0.034	0.33
19	19	69	88														315	160	0.037	0.34
25	25	75	100														320	120	0.042	0.37
38	38.1	88.1	126.2														330	80	0.052	0.43
50	50	100	150														335	60	0.062	0.48
63	63.5	113.5	177														335	50	0.074	0.54
80	80	130	210														340	40	0.087	0.61
100	100	150	250														345	30	0.104	0.66
125	125	175	300														350	25	0.125	0.83
IGS500-10	10	95	105	45	20	16.5	2	1	4	4	10.5	M8 x 13 (2x)	20	-	150 (15.0)	470	570	300	0.033	0.78
13	12.7	97.7	110.4														580	235	0.036	0.87
25	25	110	135														610	120	0.051	0.95
38	38.1	123.1	161.2														630	80	0.066	1.04
50	50	135	185														640	60	0.080	1.12
63	63.5	148.5	212														660	50	0.095	1.20
80	80	165	245														660	40	0.115	1.30
100	100	185	285														670	30	0.138	1.41
125	125	210	335														680	25	0.167	1.60
160	160	245	405														700	19	0.192	1.93
200	200	285	485														700	15	0.239	2.10
IGS750-13	12.7	107.7	120.4	50	25	17.5	3	2	8	5	10.5	M8 x 13 (2x)	20	-	150 (15.0)	740	930	235	0.05	1.16
25	25	120	145														990	120	0.07	1.26
38	38.1	133.1	171.2														1040	80	0.09	1.37
50	50	145	195														1070	60	0.10	1.47
63	63.5	158.5	222														1090	50	0.12	1.59
75	75	170	245														1110	40	0.14	1.70
80	80	175	255														1110	40	0.15	1.74
88	87.5	182.5	270														1120	35	0.16	1.80
100	100	195	295														1130	30	0.17	1.92
113	112.5	207.5	320														1140	27	0.19	2.03
125	125	220	345														1150	25	0.21	2.13
138	137.5	232.5	370														1210	22	0.21	2.36
150	150	245	395														1210	20	0.22	2.51
160	160	255	415														1220	19	0.24	2.60
175	175	270	445														1220	17	0.26	2.73
200	200	295	495														1220	15	0.30	2.94
225	225	320	545														1220	13	0.33	3.16
250	250	345	595														1220	12	0.37	3.31
275	275	370	645														1230	11	0.40	3.59
300	300	395	695														1230	10	0.44	3.81
IGS1500-13	12.7	122.3	135	75	36	21	3	2.5	8	5	10.5	M8 x 13 (4x)	40	-	150 (15.0)	1530	1870	235	0.13	3.01
25	25	135	160														1980	120	0.17	3.27
38	38.1	148.1	186.2														2060	80	0.21	3.51
50	50	160	210														2110	60	0.25	3.73
63	63.5	173.5	237														2160	50	0.29	3.97
75	75	185	260														2190	40	0.33	4.18
80	80	190	270														2200	40	0.35	4.27
88	87.5	197.5	285														2220	35	0.37	4.39
100	100	210	310														2240	30	0.41	4.63
113	112.5	222.5	335														2260	27	0.45	4.84
125	125	235	360														2270	25	0.49	5.08
138	137.5	247.5	385														2390	22	0.47	5.77
150	150	260	410														2400	20	0.51	5.99
160	160	270	430														2400	19	0.55	6.17
175	175	285	460														2410	17	0.59	6.45
200	200	310	510														2410	15	0.67	6.90
225	225	335	560														2420	13	0.75	7.35
250	250	360	610														2420	12	0.83	7.81
275	275	385	660														2430	11	0.92	8.26
300	300	410	710														2430	10	0.99	8.72

REPAIR KIT All the gas ejector models in this table ar e in accor dance with Article 4.3 of the 2014/68/EU Pr essure Equipment Dir ective (PED)

Gas Spring Code	Repair Kit Code
IGS150-...	KR / IGS150
IGS250-...	KR / IGS250
IGS500-10 / IGS500-63	KR / IGS500-1
IGS500-80 / IGS500-200	KR / IGS500-2

Gas Spring Code	Repair Kit Code
IGS5750-13 / IGS750-50	KR / IGS750-1
IGS5750-63 / IGS750-300	KR / IGS750-2
IGS51500-13 / IGS1500-50	KR / IGS1500-1
IGS51500-63 / IGS1500-300	KR / IGS1500-2

"L-VERSION" (FOR LINKED SYSTEM)

When the IGS gas springs are to be used in a linked system, make sure to order the "L-version" by adding "-L" after the gas spring code. The "L-version" gas springs are supplied already discharged and without valve, ready for the connection to linked system.
Example: "**IGS750-50-L**"

IGS

PED in accordance with 2014/68/EU

VDI

VDI 3003

ISO

ISO 11901-1

IGS 3000 ~ 10000

IGS series nitrogen gas springs feature standard dimensions and forces, as well as several fixing and linking possibilities. With the IGS series nitrogen gas springs, Bordignon now ensures a great interchangeability and a superior reliability. IGS series nitrogen gas springs are self-lubricated.

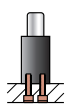

at the base with screws

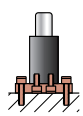

with base-plate
BF, BFA, BFB

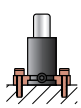

with half-flanges
SF, SFA

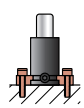

with foot brackets
ST, STA
(Not for all IGS models)

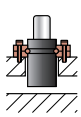

with collar flange
FL, FLQ

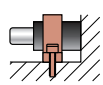

with front support
FT, FTA
(Not for all IGS models)

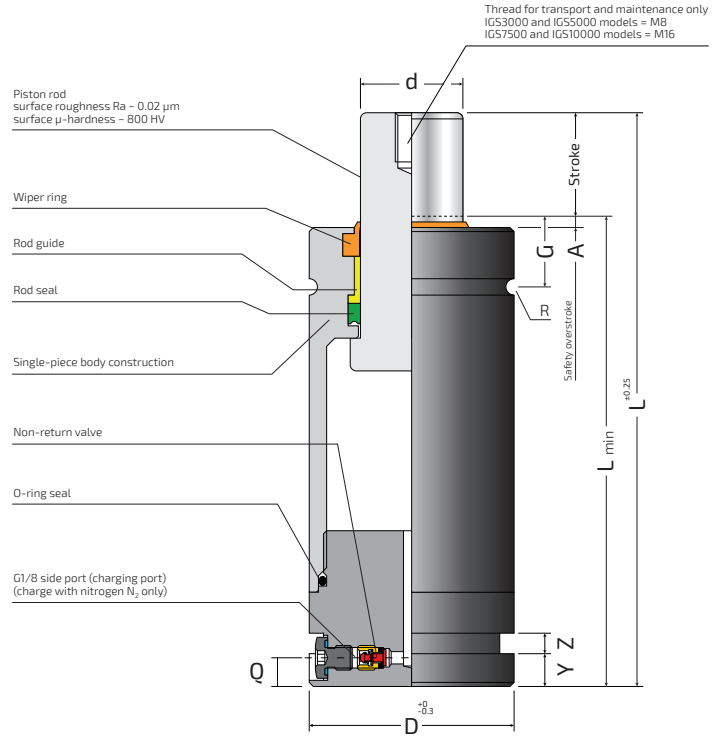

COMPACT POWER

COMPACT HEIGHT

Gas spring base

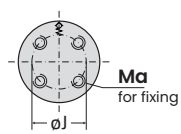

IGS3000, IGS5000
IGS7500, IGS10000

Linking To Open System

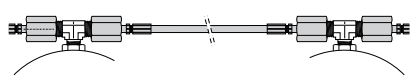

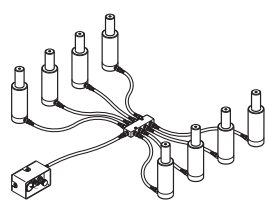

IGS3000 ~ IGS10000 - (G1/8 side port)

HOSES	ATM	ATN	AT
Gas Spring- Hose fittings	ARM	ARN	AR

ATTENTION! Follow the instructions in the "LINKED SYSTEM" section before connecting the gas springs.

Safety Protections

UNCONTROLLED RETURN SPEED

OVERSTROKE

OVERPRESSURE

This gas spring series includes the models compliant with automotive standards

BMW	B2 4006	**Nissan**	K 32 S
FCA	075.90.55	**PSA**	E24.54.815.G
Ford	W-DX35-6203	**Renault**	EM24.54.700
Mazda	PG23D	**Suzuki**	SES-K 5404e
MB	B8 3180 220 000 001	**VW**	39D 878

Continued on the next page →

IGS 3000 ~ 10000

Order Code	MAX Stroke	L min	L	D	d	G	A	R	Y	Z	Q	Ma	J	bar (MPa)	daN	daN	Cycles per minute MAX	Gas volume Litres	Weight kg
IGS3000-13	12.7	132.3	145	95	50	24	3	2.5	8	5	10.5	M8 x 13 (4x)	60	150 (15.0)	2945	3650	235	0.24	5.15
25	25	145	170													3850	120	0.30	5.58
38	38.1	158.1	196.2													4050	80	0.37	5.97
50	50	170	220													4200	60	0.43	6.33
63	63.5	183.5	247													4300	50	0.51	6.76
75	75	195	270													4400	40	0.57	7.10
80	80	200	280													4400	40	0.59	7.25
88	87.5	207.5	295													4450	35	0.63	7.49
100	100	220	320													4500	30	0.70	7.83
113	112.5	232.5	345													4550	27	0.76	8.21
125	125	245	370													4600	25	0.83	8.59
138	137.5	257.5	395													4900	22	0.80	9.72
150	150	270	420													4900	20	0.87	10.10
160	160	280	440													4900	19	0.92	10.42
175	175	295	470													4950	17	0.99	10.87
200	CE 200	320	520													4950	15	1.13	11.64
225	CE 225	345	570													5000	13	1.26	12.40
250	CE 250	370	620													5000	12	1.39	13.16
275	CE 275	395	670													5000	11	1.53	13.92
300	CE 300	420	720													5000	10	1.66	14.70
IGS5000-25	25	165	190	120	65	25.5	3	2.5	8	5	10.5	M10 x 16 (4x)	80	150 (15.0)	4980	6600	120	0.48	10.78
38	38.1	178.1	216.2													7000	80	0.58	11.52
50	50	190	240													7300	60	0.67	12.20
63	63.5	203.5	267													7600	50	0.77	13.00
75	75	215	290													7700	40	0.85	13.62
80	80	220	300													7800	40	0.89	13.91
88	87.5	227.5	315													7900	35	0.95	14.27
100	CE 100	240	340													8000	30	1.04	14.98
113	CE 112.5	252.5	365													8200	27	1.14	15.70
125	CE 125	265	390													8300	25	1.23	16.41
138	CE 137.5	277.5	415													8900	22	1.19	18.18
150	CE 150	290	440													8900	20	1.29	18.88
160	CE 160	300	460													9000	19	1.36	19.45
175	CE 175	315	490													9000	17	1.47	20.30
200	CE 200	340	540													9100	15	1.66	21.72
225	CE 225	365	590													9200	13	1.85	23.14
250	CE 250	390	640													9200	12	2.04	24.56
275	CE 275	415	690													9300	11	2.23	25.98
300	CE 300	440	740													9300	10	2.42	27.40
IGS7500-25	CE 25	180	205	150	80	27.5	3	2.5	8	5	10.5	M10 x 16 (4x)	100	150 (15.0)	7540	9300	120	1.15	15.72
38	CE 38.1	193.1	231.2													9700	80	1.32	16.73
50	CE 50	205	255													10000	60	1.47	17.69
63	CE 63.5	218.5	282													10300	50	1.64	18.74
75	CE 75	230	305													10500	40	1.79	19.65
80	CE 80	235	315													10600	40	1.86	20.04
88	CE 87.5	242.5	330													10700	35	1.95	20.52
100	CE 100	255	355													10900	30	2.11	21.55
113	CE 112.5	267.5	380													11000	27	2.27	22.48
125	CE 125	280	405													11200	25	2.43	23.52
138	CE 137.5	292.5	430													11800	22	2.33	26.50
150	CE 150	305	455													11900	20	2.49	27.53
160	CE 160	315	475													12000	19	2.62	28.33
175	CE 175	330	505													12000	17	2.82	29.49
200	CE 200	355	555													12200	15	3.14	31.47
225	CE 225	380	605													12300	13	3.46	33.43
250	CE 250	405	655													12400	12	3.78	35.39
275	CE 275	430	705													12500	11	4.10	37.36
300	CE 300	455	755													12600	10	4.43	39.33
IGS10000-25	CE 25	185	210	195	95	33.5	3	2.5	8	8	15	M12 x 18 (4x)	120	150 (15.0)	10600	12900	120	1.87	28.39
38	CE 38.1	198.1	236.2													13300	80	2.16	29.90
50	CE 50	210	260													13700	60	2.42	31.33
63	CE 63.5	223.5	287													14000	50	2.72	32.92
80	CE 80	240	320													14300	40	3.09	34.87
100	CE 100	260	360													14600	30	3.53	37.22
125	CE 125	285	410													14900	25	4.08	40.17
160	CE 160	320	480													15900	19	4.23	49.23
200	CE 200	360	560													16100	15	5.12	53.95
250	CE 250	410	660													16300	12	6.22	59.84
300	CE 300	460	760													17200	10	6.62	71.32

CE

The gas spring models for which the CE symbol is indicated have an internal gas volume > 1 litr e. They fall into Category II of the 2014/68/EU Pressure Equipment Dir ective (PED).

All the gas ejector models in this table ar e in accor dance with Article 4.3 of the 2014/68/EU Pr essure Equipment Dir ective (PED)

REPAIR KIT

Gas Spring Code	Repair Kit Code
IGS3000-13 ~ IGS3000-50	KR/IGS3000-1
IGS3000-63 ~ IGS3000-300	KR/IGS3000-2
IGS5000-25, IGS5000-38	KR/IGS5000-1
IGS5000-50 ~ IGS5000-300	KR/IGS5000-2

Gas Spring Code	Repair Kit Code
IGS7500-25, IGS7500-38	KR/IGS7500-1
IGS7500-50 ~ IGS7500-300	KR/IGS7500-2
IGS10000-25, IGS10000-38	KR/IGS10000-1
IGS10000-50 ~ IGS10000-300	KR/IGS10000-2

"L-VERSION" (FOR LINKED SYSTEM)

When the IGS gas springs are to be used in a linked system, make sure to order the "L-version" by adding "-L" after the gas spring code. The "L-version" gas springs are supplied already discharged and without valve, ready for the connection to linked system.
Example: "**IGS5000-50-L**"

VV

PED In accordance with 2014/68/EU

VV 170 ~ 2945

VV series nitrogen gas springs feature different dimensions and forces.
VV series nitrogen gas springs are self-lubricated.

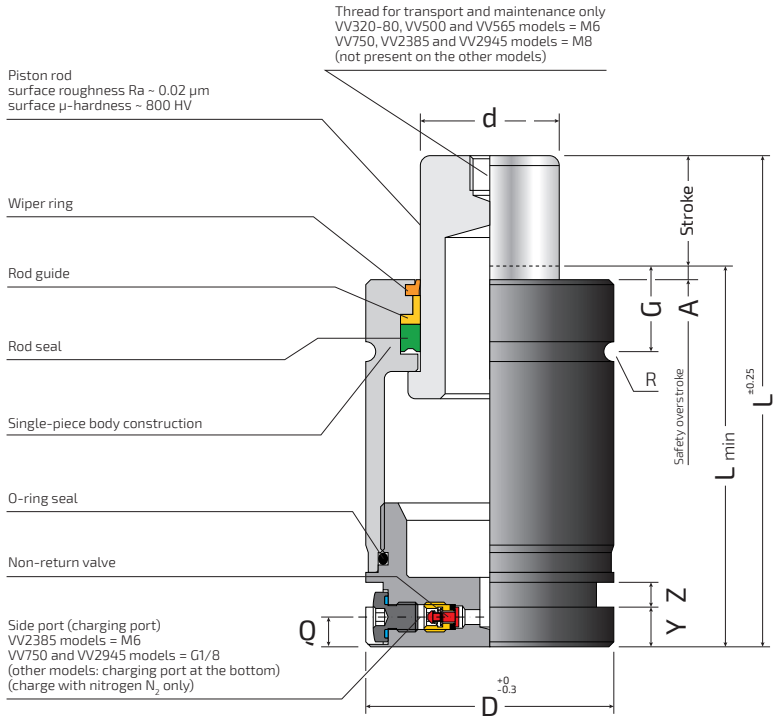

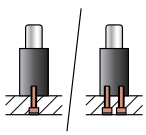

at the base with screws

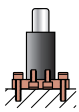

with base-plate
BF, BFA, BFB
for VV750 ~ VV2945

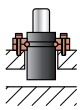

with collar flange
FL, FLQ
(Not for all VV models)

with front support
FT, FTA
(Not for all VV models)

Gas spring base

VV170, VV320-63/63 H

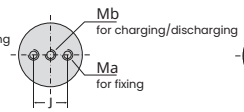

VV320-80, VV500-63, VV565-63

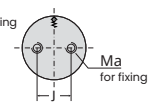

VV170

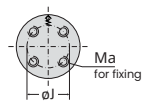

VV2385
VV2495

Linking To Open System

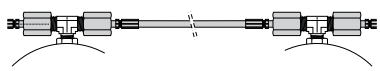

VV2385 - (M6 side port)

HOSES	ATM	ATNM
Gas Spring- Hose fittings	ARM	ARNM

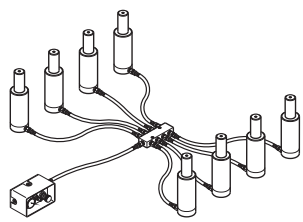

VV750 / VV2945 - (G1/8 side port)

HOSES	ATM	ATN	AT
Gas Spring- Hose fittings	ARM	ARN	AR

ATTENTION! Follow the instructions in the "LINKED SYSTEM" section before connecting the gas springs.

Springs

Safety Protections

UNCONTROLLED RETURN SPEED

OVERSTROKE

OVERPRESSURE

Continued on the next page →

VV 700 ~ 2945

Order Code	MAX Stroke	L min	L	D	d	G	A	R	Y	Z	Q	Ma	J	Mb	bar (MPa)	daN	daN	Cycles per minute MAX	Gas volume Litres	Weight kg
VV170-38	38	97	135	19	11	17	1	1	-	-	-	M6 x 10	-	-	180 (18.0)	170	275	80	0.011	0.14
50	50	110	160														285	60	0.014	0.17
63	63	127	190														285	50	0.017	0.18
VV320-63	63	127	190	25	15	17	1	1	-	-	-	M6 x 9	-	-	180 (18.0)	320	540	50	0.032	0.31
63H	63	145	208														500	50	0.038	0.33
VV320-80	80	125	205	32	15	-	2	-	-	-	-	M6 x 8 (2x)	18	M6	180 (18.0)	320	520	40	0.044	0.44
VV500-63	63	132	195	32	20	-	2	-	-	-	-	M5 x 8 (2x)	15	M6	160 (16.0)	500	830	50	0.058	0.48
VV565-63	63	142	205	32	20	-	2	-	-	-	-	M5 x 8 (2x)	15	M6	180 (18.0)	565	900	50	0.064	0.50
VV750-63	63	113	176	50	25	-	2	-	-	-	10.5	M8 x 13 (2x)	20	-	150 (15.0)	740	1280	50	0.085	1.40
80	80	130	210														1270	40	0.109	2.00
VV2385-80	80	128	208	75	45	21	3	2.5	-	-	6	M8 x 9 (4x)	40	-	150 (15.0)	2385	4250	40	0.33	2.48
100	100	148	248														4300	30	0.41	2.79
VV2945-63	62.5	182.5	245	95	50	-	3	-	-	-	10.5	M8 x 13 (4x)	60	-	150 (15.0)	2945	3950	50	0.70	5.16
80	80	138	218														4850	40	0.47	5.21
100	100	158	258														4850	30	0.60	5.09
125	125	183	308														4800	25	0.75	7.24

All the gas ejector models in this table are in accordance with Article 4.3 of the 2014/68/EU Pressure Equipment Directive (PED)

"L-VERSION" (FOR LINKED SYSTEM)

When the VV gas springs are to be used in a linked system, make sure to order the "L-version" by adding "-L" after the gas spring code.
The "L-version" gas springs are supplied already discharged and without valve, ready for the connection to linked system.
Example: "**VV750-80-L**"

REPAIR KIT

Gas Spring Code	Repair Kit Code
VV170-...	KR/VV170
VV320-63, VV320-63H	KR/VV320-63-63H
VV320-80	KR/VV320-80
VV500-63	KR/VV500

Gas Spring Code	Repair Kit Code
VV565-63	KR/VV565
VV750-...	KR/VV750
VV2385-...	KR/VV2385
VV2945-...	KR/VV2945

CHT Order Code	MAX Stroke	L	N	D	d	bar (MPa)	daN	daN	Gas Spring Base
●● CHT19-10	10	70	80	19	10	"See the note on the previous page."	100	130	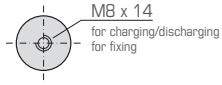
●● 15	15	75	90					135	
●● 25	25	85	110					140	
●● 38	38	98	136					145	
●● 50	50	110	160					155	
●● 80	80	140	220					165	
●● CHT25-10	10	70	80	25	14	"See the note on the previous page."	200	250	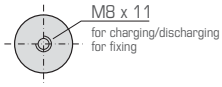
●● 15	15	75	90					270	
●● 25	25	85	110					290	
●● 38	38	98	136					320	
●● 50	50	110	160					330	
●● 80	80	140	220					350	
●● 125	125	185	310					370	
●● CHT32-10	10	60	70	32	18	"See the note on the previous page."	350	480	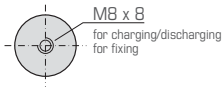
●● 15	15	65	80					490	
●● 25	25	75	100					520	
●● 38	38	88	126					530	
●● 50	50	100	150					540	
●● 80	80	130	210					550	
●● 125	125	175	300					560	
●● 160	160	210	370					570	
●● CHT38-10	10	65	75	38	22	"See the note on the previous page."	500	650	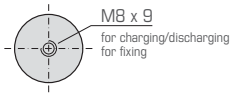
●● 15	15	70	85					700	
●● 25	25	80	105					750	
●● 38	38	93	131					780	
●● 50	50	105	155					800	
●● 80	80	140	220					820	
●● 125	125	185	310					840	
●● 160	160	220	380					860	
●● 200	200	260	460					880	
● CHT50-10	10	95	105	50	30	"See the note on the previous page."	1000	1250	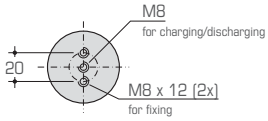
● 25	25	110	135					1400	
● 38	38	123	161					1500	
● 50	50	135	185					1550	
● 63	63	148	211					1600	
● 80	80	165	245					1650	
● 100	100	195	295					1700	
● 125	125	220	345					1720	
● 160	160	255	415					1730	
● 200	200	295	495					1750	
● 250	250	345	595					1770	
● CHT63-10	10	95	105	63	40	"See the note on the previous page."	1500	2200	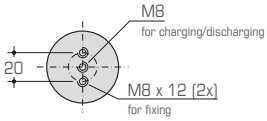
● 25	25	110	135					2400	
● 38	38	123	161					2500	
● 50	50	135	185					2600	
● 63	63	148	211					2650	
● 80	80	165	245					2700	
● 100	100	185	285					2750	
● 125	125	220	345					2800	
● 160	160	255	415					2850	
● 200	200	295	495					2900	
● CHT75-10	10	105	115	75	45	"See the note on the previous page."	2500	3400	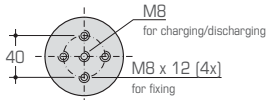
● 25	25	120	145					3800	
● 38	38	133	171					4200	
● 50	50	145	195					4300	
● 63	63	158	221					4400	
● 80	80	175	255					4450	
● 100	100	200	300					4500	
● 125	125	225	350					4550	
● 160	160	265	425					4650	
● 200	200	310	510					4800	
● CHT95-25	25	130	155	95	58	"See the note on the previous page."	4000	6200	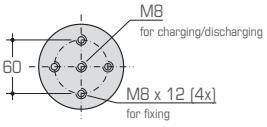
● 38	38	143	181					6500	
● 50	50	155	205					6700	
● 63	63	168	231					6800	
● 80	80	190	270					6900	
● 100	100	210	310					7000	
● 125	125	245	370					7150	
● CHT120-25	25	140	165	120	75	"See the note on the previous page."	6500	9100	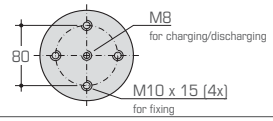
● 38	38	153	191					9700	
● 50	50	165	215					10000	
● 63	63	178	241					10400	
● 80	80	195	275					10700	

● Without G1/8 side hole and gr oove ● Available on r equest

CSMHT Order Code	MAX Stroke	L	N	D	d	bar (MPa)	daN	daN	Gas Spring Base
• CSMHT19-10	10	50	60	19	10	"See the note on the previous page."	100	130	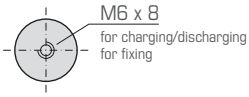
• 15	15	55	70					140	
• 25	25	65	90					150	
• 38	38	78	116					160	
• 50	50	90	140					165	
• 80	80	120	200					170	
• CSMHT25-10	10	50	60	25	14	"See the note on the previous page."	200	290	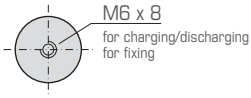
• 15	15	55	70					340	
• 25	25	65	90					350	
• 38	38	78	116					370	
• 50	50	90	140					380	
• 80	80	120	200					390	
• 125	125	165	290					400	
• CSMHT32-10	10	55	65	32	18	"See the note on the previous page."	350	490	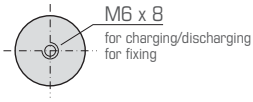
• 15	15	60	75					500	
• 25	25	70	95					530	
• 38	38	83	121					550	
• 50	50	95	145					570	
• 80	80	125	205					580	
• 125	125	170	295					590	
• 160	160	205	365					600	
• CSMHT38-10	10	55	65	38	22	"See the note on the previous page."	500	720	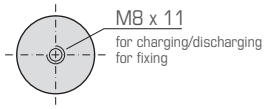
• 15	15	60	75					750	
• 25	25	70	95					780	
• 38	38	83	121					820	
• 50	50	95	145					830	
• 80	80	125	205					850	
• 125	125	170	295					860	
• 160	160	205	365					870	
• 200	200	245	445					880	
• CSMHT50-10	10	60	70	50	30	"See the note on the previous page."	1000	1600	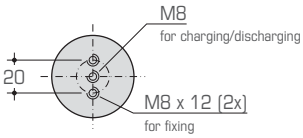
• 25	25	75	100					1630	
• 38	38	88	126					1670	
• 50	50	100	150					1690	
• 63	63	113	176					1700	
• 80	80	130	210					1710	
• 100	100	150	250					1720	
• 125	125	190	315					1730	
• 160	160	235	395					1740	
• 200	200	275	475					1750	
• 250	250	325	575					1760	
• CSMHT63-10	10	65	75	63	40	"See the note on the previous page."	1500	2200	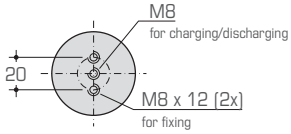
• 25	25	80	105					2400	
• 38	38	93	131					2500	
• 50	50	105	155					2550	
• 63	63	118	181					2600	
• 80	80	135	215					2650	
• 100	100	160	260					2700	
• 125	125	190	315					2750	
• 160	160	235	395					2800	
• 200	200	275	475					2900	
• CSMHT75-10	10	65	75	75	45	"See the note on the previous page."	2500	4000	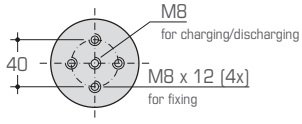
• 25	25	80	105					4500	
• 38	38	93	131					4650	
• 50	50	105	155					4700	
• 63	63	118	181					4730	
• 80	80	135	215					4740	
• 100	100	155	255					4750	
• 125	125	200	325					4760	
• 160	160	250	410					4800	
• 200	200	300	500					4950	
• CSMHT95-25	25	90	115	95	58	"See the note on the previous page."	4000	6900	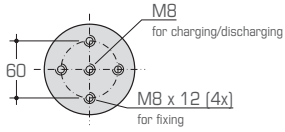
• 38	38	103	141					7050	
• 50	50	115	165					7150	
• 63	63	128	191					7180	
• 80	80	155	235					7200	
• 100	100	185	285					7250	
• 125	125	220	345					7400	
• CSMHT120-25	25	100	125	120	75	"See the note on the previous page."	6500	10300	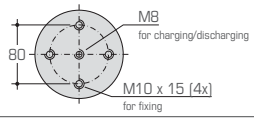
• 38	38	113	151					10900	
• 50	50	125	175					11200	
• 63	63	138	201					11400	
• 80	80	160	240					11500	

• Available on r equest

Fixing Base Plate **BF**

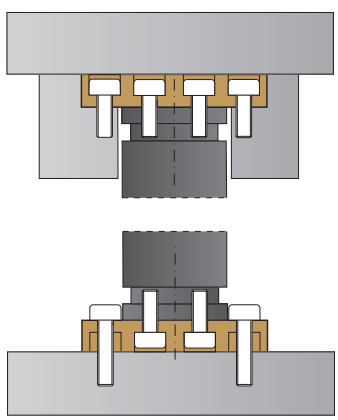

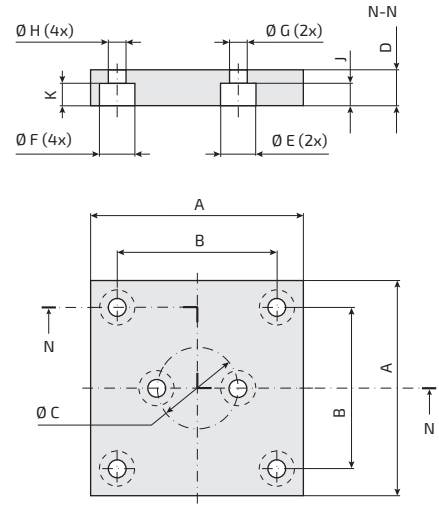

FIG. 1

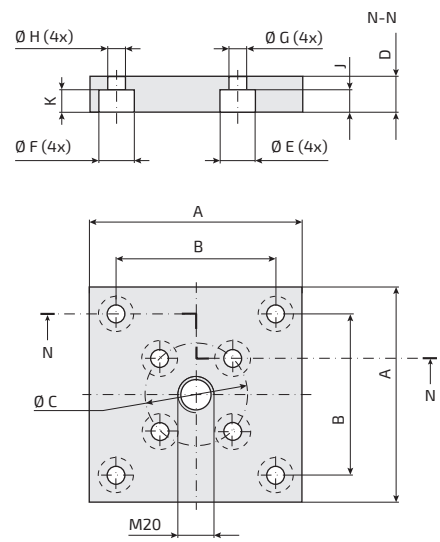

FIG. 2

Order Code	Refer ence to Standar ds	For models...	A	B	Ø C	D	Ø E	Ø F	Ø G	Ø H	J	K	FIG.
BF 45	ISO 11901-2, VDI 3003	AGS750, IGS500, LGS500	70	50	20	20	15	15	9	9	14	12	1
BF 50	ISO 11901-2, VDI 3003	AGS1000, AGS1500, IGS750, VV750	75	56.5	20	20	15	15	9	9	14	12	1
BF 63	ISO 11901-2	AGS1500	100	73.5	20	20	15	18	9	11	14	12	1
BF 75	ISO 11901-2, VDI 3003	AGS1500, AGS2400, IGS1500, TGS5000, VV2385	100	73.5	40	20	15	18	9	11	14	12	2
BF 95	ISO 11901-2, VDI 3003	AGS4200, IGS3000, VV2945	120	92	60	20	15	20	9	13.5	14	13	2
BF 120	ISO 11901-2, VDI 3003	AGS6600, IGS5000	140	109.5	80	20	18	20	11	13.5	15	13	2
BF 150	ISO 11901-2, VDI 3003	AGS9500, IGS7500	190	138	100	25	18	26	11	17.5	15	17	2
BF 195	ISO 11901-2, VDI 3003	AGS20000, IGS10000	210	170	120	25	20	26	13.5	17.5	13	17	2

ISO 11901-2 **VDI 3003**

This gas spring series includes the models compliant with automotive standards

General Motors	90.25.04
PSA	E24.54.815.G
Renault	EM24.54.700

BF

Fixing Base Plate **BFA**

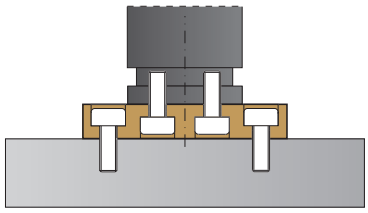

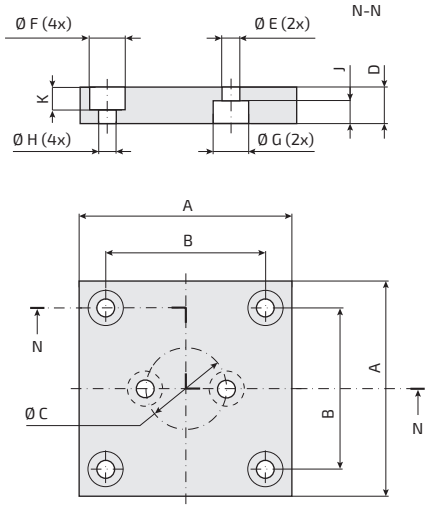

FIG. 1

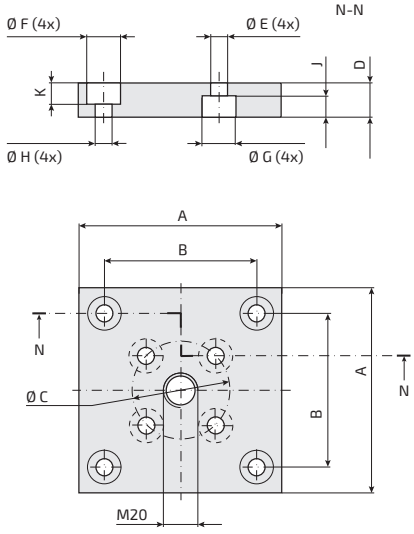

FIG. 2

Order Code	Reference to Standards	For models...	A	B	Ø C	D	Ø E	Ø F	Ø G	Ø H	J	K	FIG.
BFA 45	-	AGS750, IGS500, LGS500	70	50	20	20	9	18	15	11	14	12	**1**
BFA 50	-	AGS1000, AGS1500, IGS750, VV750	75	56.5	20	20	9	18	15	11	14	12	**1**
BFA 75	-	AGS1500, AGS2400, IGS1500, TGS5000, VV2385	100	73.5	40	20	9	18	15	11	14	12	**2**
BFA 95	-	AGS4200, IGS3000, VV2945	120	92	60	20	9	20	15	13.5	14	13	**2**
BFA 120	-	AGS6600, IGS5000	140	109.5	80	20	11	20	18	13.5	15	13	**2**
BFA 150	-	AGS9500, IGS7500	190	138	100	25	11	26	18	17.5	15	17	**2**
BFA 195	-	AGS20000, IGS10000	210	170	120	25	13.5	26	20	17.5	15	17	**2**

This gas spring series includes the models compliant with automotive standards

Renault EM24.54.700

BFA

Fixing Base Plate **BFB**

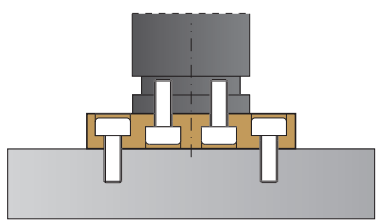

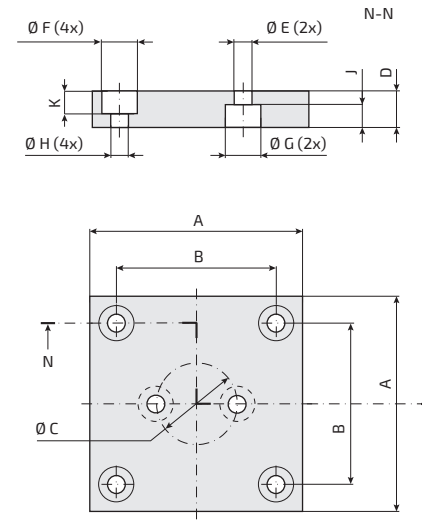

FIG. 1

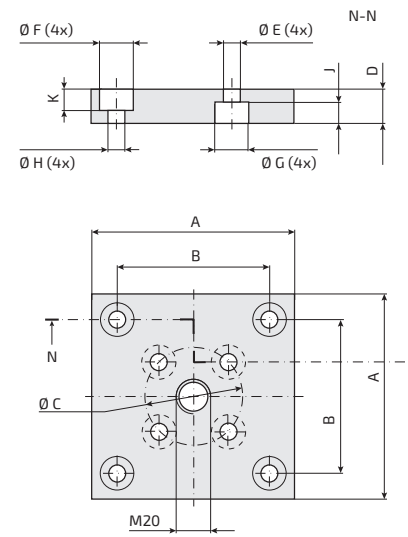

FIG. 2

Order Code	Refer ence to Standar ds	For models...	A	B	Ø C	D	Ø E	Ø F	Ø G	Ø H	J	K	FIG.
BFB 45	-	AGS750, IGS500, LGS500	70	50	20	20	9	15	15	9	12	12	1
BFB 50	-	AGS1000, AGS1500, IGS750, VV750	75	56.5	20	20	9	15	15	9	12	12	1
BFB 63	-	AGS1500	100	73.5	20	20	9	18	15	11	12	12	1
BFB 75	-	AGS1500, AGS2400, IGS1500, TGS5000, VV2385	100	73.5	40	20	9	18	15	11	12	14	2
BFB 95	-	AGS4200, IGS3000, VV2945	120	92	60	20	9	20	15	13.5	14	13	2
BFB 120	-	AGS6600, IGS5000	140	109.5	80	20	11	20	18	13.5	15	13	2
BFB 150	-	AGS9500, IGS7500	190	138	100	20	11	20	18	13.5	15	13	2
BFB 195	-	AGS20000, IGS10000	210	170	120	25	13.5	26	20	17.5	15	17	2

This gas spring series includes the models compliant with automotive standards

BMW	B2 4009
MB	B8 0132 110 008 801
Renault	EM24.54.700

BFB

Fixing Half-flanges SF

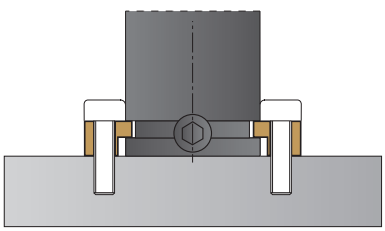

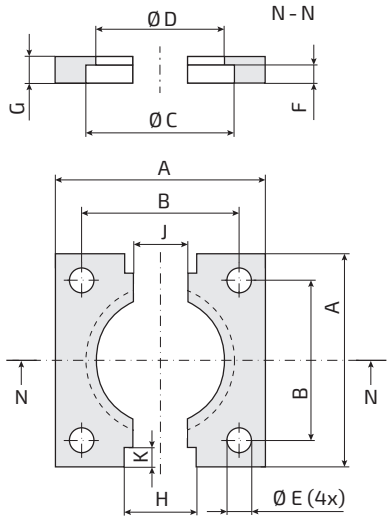

FIG. 1

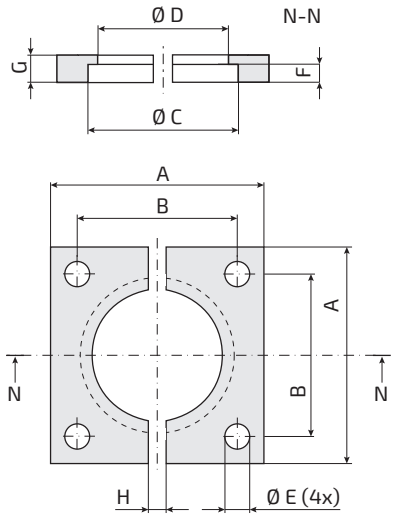

FIG. 2

Order Code	Refer ence to Standar ds	For models...	A	B	Ø C	Ø D	Ø E	F	G	H	J	K	FIG.
SF 32	-	AGS350, IGS150, TGS700	50	35	32.5	28.5	6.6	4	7	21	17	6.5	1
SF 38	-	AGS500, IGS250, TGS1000	55	40	38.5	34.5	6.6	4	7	21	17	6.5	1
SF 45	ISO 11901-2, VDI 3003	AGS750, IGS500, LGS500	70	50	45.5	41.5	9	4	7	20	-	-	2
SF 50	ISO 11901-2, VDI 3003	AGS1000, IGS750, TGS2000	75	56.5	50.5	44.5	9	8	12	24	-	-	2
SF 63	-	AGS1500, TGS3000	85	63.5	63.5	57.5	11	8	12	24	-	-	2
SF 63A	ISO 11901-2	AGS1500, TGS3000	100	73.5	64	57	11	8	12	24	-	-	2
SF 75	ISO 11901-2, VDI 3003	AGS2400, IGS1500, TGS5000	100	73.5	75.5	68.5	11	8	12	24	-	-	2
SF 95	ISO 11901-2, VDI 3003	AGS4200, IGS3000, TGS8000	120	92	95.5	88.5	13.5	8	12	24	-	-	2
SF 120	ISO 11901-2, VDI 3003	AGS6600, IGS5000, TGS12000	140	109.5	120.5	113.5	13.5	8	12	24	-	-	2
SF 150	ISO 11901-2, VDI 3003	AGS9500, IGS7500	190	138	150.5	143.5	17.5	8	12	24	-	-	2
SF 195	ISO 11901-2, VDI 3003	AGS20000, IGS10000	210	170	195.5	188	17.5	8	13	24	-	-	2

ISO 11901-2 **VDI 3003**

This gas spring series includes the models compliant with automotive standards

BMW	B2 4009	**MB**	B8 0138 100 000 001
FCA	075.90.90	**Renault**	EM24.54.700
Ford	W-DX35-62M	**VW**	39D 848
General Motors	90.25.01		

SF

Fixing Half-flanges SFA

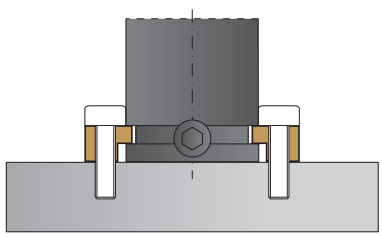

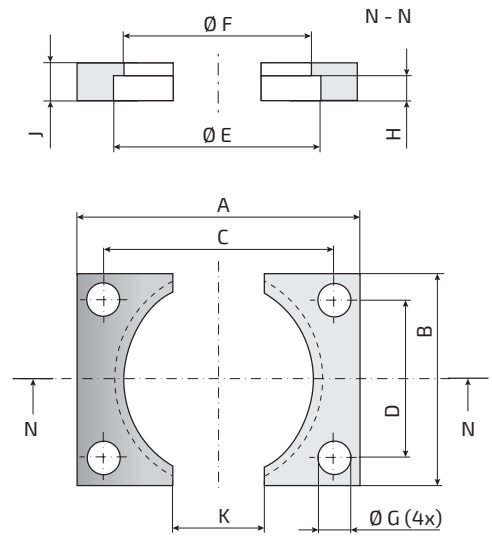

Order Code	Refer ence to Standar ds	For models...	A	B	Ø C	D	Ø E	Ø F	Ø G	Ø H	J	K
SFA 32	-	AGS350, IGS150, TGS700	50	27	40	18	32.5	28.5	6.6	4	7	20
SFA 38	-	AGS500, IGS250, TGS1000	55	33	44	20	38.5	34.5	6.6	4	7	20
SFA 45	-	AGS750, IGS500, LGS500	70	40	57	27	45.5	41.5	9	4	7	25
SFA 50	-	AGS1000, IGS750, TGS2000	75	45	62	32	50.5	44.5	9	8	12	25
SFA 63	-	AGS1500, TGS3000	85	58	69	42	63.5	57.5	11	8	12	30
SFA 75	-	AGS2400, IGS1500, TGS5000	100	70	84	54	75.5	68.5	11	8	12	30
SFA 95	-	AGS4200, IGS3000, TGS8000	120	90	100	70	95.5	88.5	13.5	8	12	40
SFA 120	-	AGS6600, IGS5000, TGS12000	140	115	120	95	120.5	113.5	13.5	8	12	50
SFA 150	-	AGS9500, IGS7500	190	145	165	120	150.5	143.5	17.5	8	12	60
SFA 195	-	AGS20000, IGS10000	210	190	185	165	195.5	188	17.5	8	13	80

Fixing Foot Brackets ST

ST 38 - ST 45 - ST 195

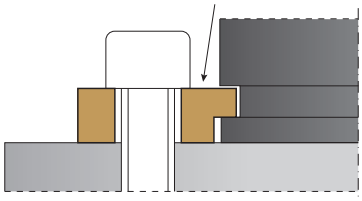

ST 50 ~ 150

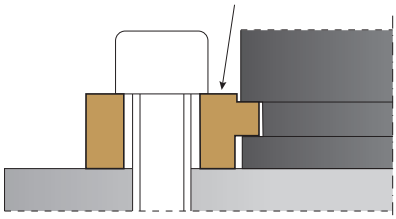

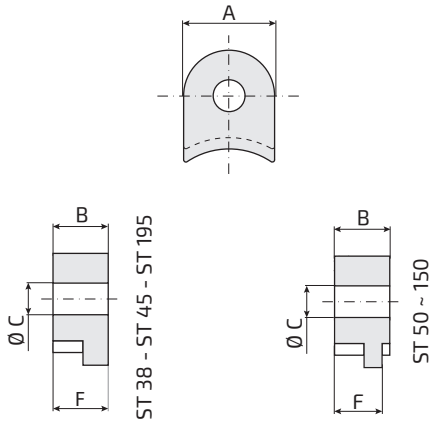

FIG. 1

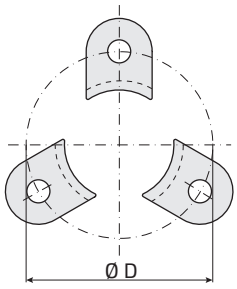

FIG. 2

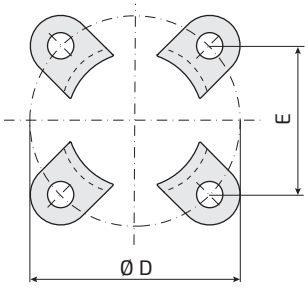

Order Code	Refer ence to Standar ds	For models...	A	B	C	Ø D	E	F	FIG.
ST 38	-	AGS500, IGS250, TGS1000	20	7	7	56.6	-	7	1
ST 45	-	AGS750, IGS500, LGS500	25	7	9	70.7	-	7	1
ST 50	-	AGS1000, IGS750, TGS2000	30	14.2	13	80	-	13	1
ST 63	-	AGS1500, TGS3000	30	14.2	13	92	65	13	2
ST 75	-	AGS2400, IGS1500, TGS5000	30	14.2	13	104	73.5	13	2
ST 95	-	AGS4200, IGS3000, TGS8000	40	14.2	17	130	92	13	2
ST 120	-	AGS6600, IGS5000, TGS12000	50	14.2	17	155	109.5	13	2
ST 150	-	AGS9500, IGS7500	50	14.2	21	195	138	13	2
ST 195	-	AGS20000, IGS10000	58	16	21	240	169	16	2

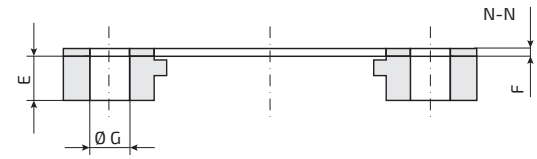

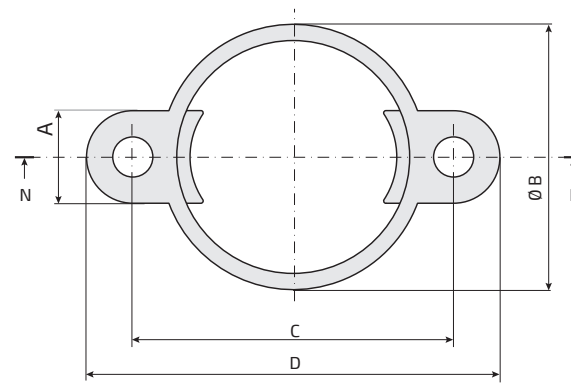

Fixing Foot Brackets STA

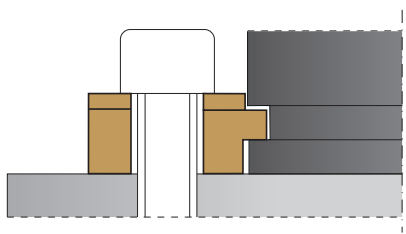

Order Code	Refer ence to Standar ds	For models...	A	Ø B	C	D	E	F	Ø G
STA 38	-	AGS500, IGS250, TGS1000	20	48	56.6	76.6	7	2.5	7
STA 45	-	AGS750, IGS500, LGS500	25	56	70.7	95.7	7	2.5	9
STA 50	-	AGS1000, IGS750, TGS2000	30	61	80	110	14.2	2.5	13
STA 63	-	AGS1500, TGS3000	30	73	92	122	14.2	2.5	13
STA 75	-	AGS2400, IGS1500, TGS5000	30	86	104	134	14.2	2.5	13
STA 95	-	AGS4200, IGS3000, TGS8000	40	106	130	170	14.2	2.5	17
STA 120	-	AGS6600, IGS5000, TGS12000	50	131	155	205	14.2	2.5	17
STA 150	-	AGS9500, IGS7500	50	170	195	245	14.2	2.5	21

FV 19 Collar flange (for base-fixing)

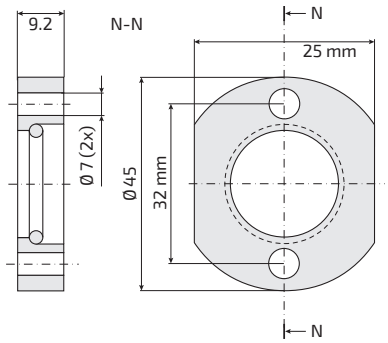

Fixing Possibilities

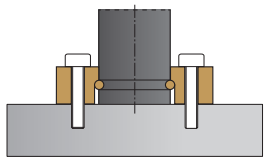

Collar Flange

FL 12 ~ 25

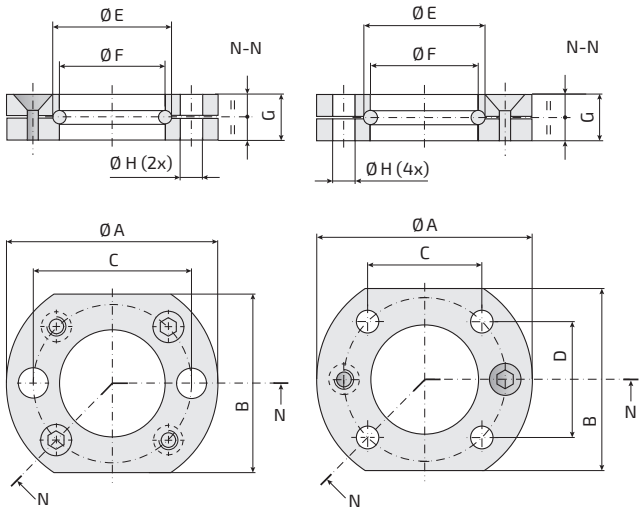

FIG. 1 **FIG. 2**

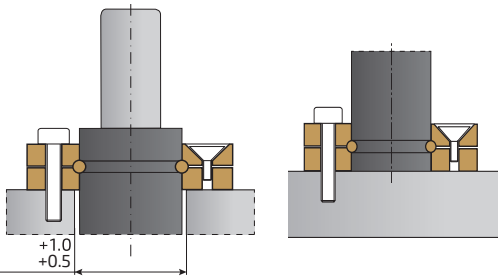

Body Ø

Order Code	Reference to Standards	For models...	Ø A	B	C	D	Ø E	Ø F	G	Ø H	FIG.
FL 12	-	VGS50	34	21	24	-	13.6	12.5	9	6.6	1
FL 15	-	VGS70	37	24	27	-	16.6	15.5	9	6.6	1
FL 19 A	VDI 3003	AGS170, VGS90, VV170	44	25	32	-	21	19.5	9	6.6	1
FL 19 B	ISO 11901-2	AGS170, VGS90, VV170	44	25	30	12	21	19.5	9	6.6	2
FL 25 A	VDI 3003	AGS320, TGS400, VGS200, VV320-63/63H	50	30	38	-	27	25.5	9	6.6	1
FL 25 B	ISO 11901-2	AGS320, TGS400, VGS200, VV320-63/63H	50	30	34	18	27	25.5	9	6.6	2

ISO 11901-2 **VDI 3003**

This gas spring series includes the models compliant with automotive standards

BMW	B2 4009	**MB**	B8 0134 400 008 801
FCA	075.90.75	**PSA**	E24.54.815.G
Ford	W-DX35-80M	**VW**	39D 848

FL

Collar Flange **FL 32 ~ 195**

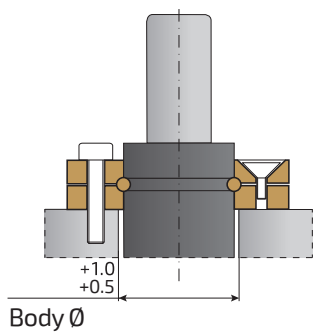

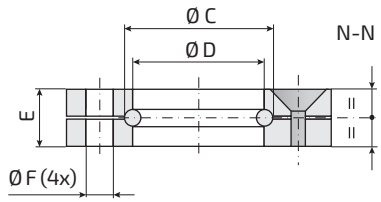

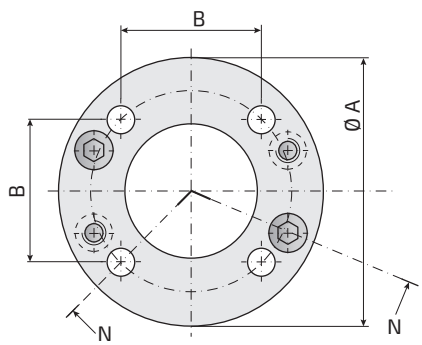

Order Code	Refer ence to Standar ds	For models...	Ø A	B	Ø C	Ø D	E	Ø F
FL 32	ISO 11901-2, VDI 3003	AGS350, IGS150, TGS700	60	35	34	32.5	9	6.6
FL 38	ISO 11901-2, VDI 3003	AGS500, IGS250, TGS1000	68	40	40	38.5	9	6.6
FL 45	ISO 11901-2, VDI 3003	AGS750, IGS500, LGS500	86	50	47	45.5	13	9
FL 50	ISO 11901-2, VDI 3003	AGS1000, IGS750	95	56.5	54	50.5	13	9
FL 63	ISO 11901-2	AGS1500, TGS3000	122	73.5	67	63.5	16	11
FL 75	ISO 11901-2, VDI 3003	AGS2400, IGS1500, VV2385	122	73.5	80	75.5	16	11
FL 95	ISO 11901-2, VDI 3003	AGS4200, IGS3000	150	92	100	95.5	18	13.5
FL 120	ISO 11901-2, VDI 3003	AGS6600, IGS5000, TGS12000	175	109.5	125	120.5	21	13.5
FL 150	ISO 11901-2, VDI 3003	AGS9500, IGS7500	220	138	155	150.5	27	17.5
FL 195	ISO 11901-2, VDI 3003	AGS20000, IGS10000	290	170	200	195.5	27	17.5

ISO 11901-2 **VDI 3003**

This gas spring series includes the models compliant with automotive standards

BMW	B2 4009	**MB**	B8 0134 300 000 001
FCA	075.90.80	**Renault**	EM24.54.700
General Motors	90.25.03		

FL

Collar Flange

FLA

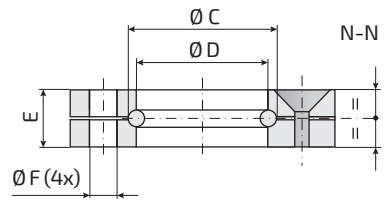

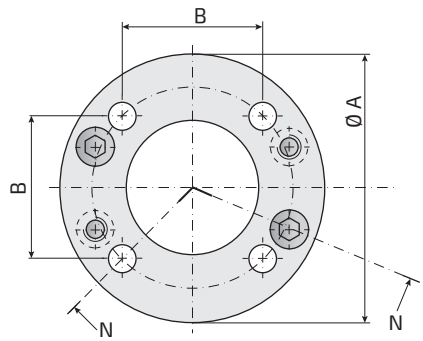

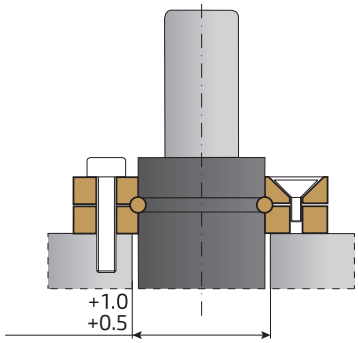

Body Ø

Order Code	Refer ence to Standar ds	For models...	Ø A	B	Ø C	Ø D	E	Ø F
FLA 50	-	TGS2000	95	56.5	53	50.5	13	9
FLA 75	-	TGS5000	122	73.5	78	75.5	16	11
FLA 95	-	TGS8000	150	92	98	95.5	18	13.5

This gas spring series includes the models compliant with automotive standards

Renault	EM24.54.700

FLA

Collar Flange **FLQ**

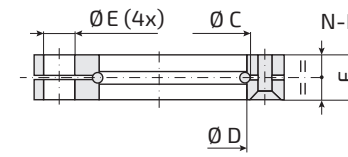

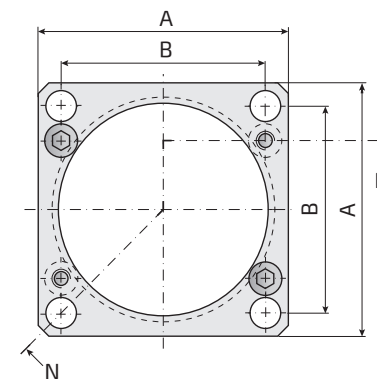

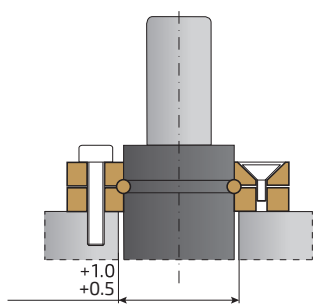

Order Code	Reference to Standards	For models...	A	B	Ø C	Ø D	Ø E	F
FLQ 32	ISO 11901-2, VDI 3003	AGS350, IGS150, TGS700	45	35	34	32.5	6.6	9
FLQ 38	ISO 11901-2, VDI 3003	AGS500, IGS250, TGS1000	52	40	40	38.5	6.6	9
FLQ 45	ISO 11901-2, VDI 3003	AGS750, IGS500, LGS500	64	50	47	45.5	9	13
FLQ 50	ISO 11901-2, VDI 3003	AGS1000, IGS750	70	56.5	54	50.5	9	13
FLQ 63 A	ISO 11901-2, VDI 3003	AGS1500, TGS3000	80	64	67	63.5	11	16
FLQ 63 B	-	AGS1500, TGS3000	90	73.5	67	63.5	11	16
FLQ 75	ISO 11901-2, VDI 3003	AGS2400, IGS1500, VV2385	90	73.5	80	75.5	11	16
FLQ 95	ISO 11901-2, VDI 3003	AGS4200, IGS3000	110	92	100	95.5	13.5	18
FLQ 120	ISO 11901-2, VDI 3003	AGS6600, IGS5000, TGS12000	130	109.5	125	120.5	13.5	21
FLQ 150	ISO 11901-2, VDI 3003	AGS9500, IGS7500	162	138	155	150.5	17.5	27
FLQ 195	ISO 11901-2, VDI 3003	AGS20000, IGS10000	210	170	200	195.5	17.5	27

ISO 11901-2 **VDI 3003**

This gas spring series includes the models compliant with automotive standards

BMW	B2 4009	**General Motors**	90.25.02
FCA	075.90.85	**VW**	39D 848
Ford	W-DX35-62M		

FLQ

Collar Flange

FLQA

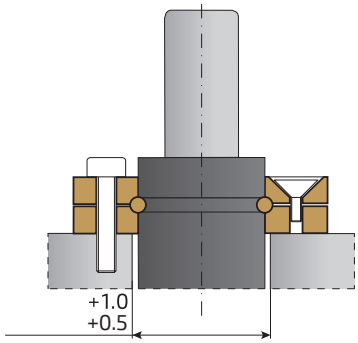

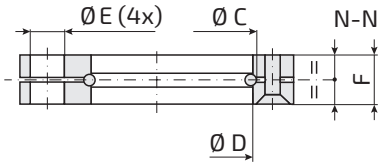

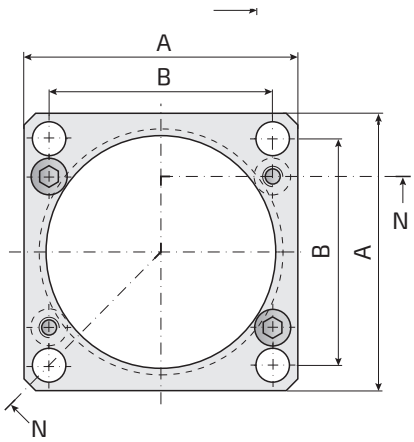

Order Code	Reference to Standards	For models...	Ø A	B	Ø C	Ø D	E	Ø F
FLQA 50	-	TGS2000	70	56.5	53	50.5	9	13
FLQA 75	-	TGS5000	90	73.5	78	75.5	11	16
FLQA 95	-	TGS8000	110	92	98	95.5	13.5	18

FLQA

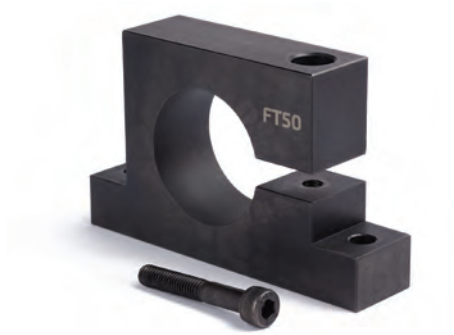

Front Support FT

MAX
0.5 x diameter of the gas spring body

MIN
1/3 (one third) of dimension L min of the gas spring

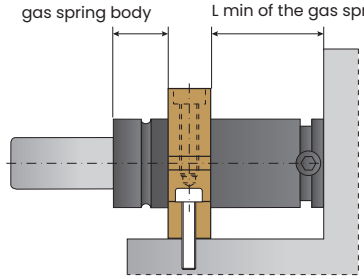

Dimension **MIN** must be respected to allow the over-pressure and over-stroke safety system to work properly (see dedicated catalogue section).

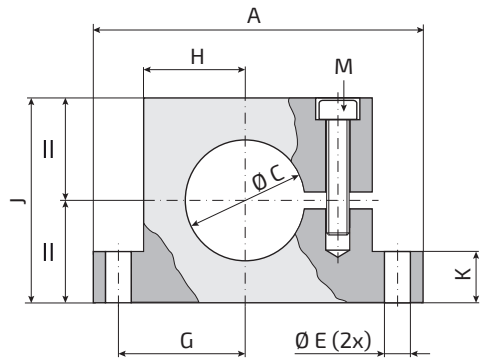

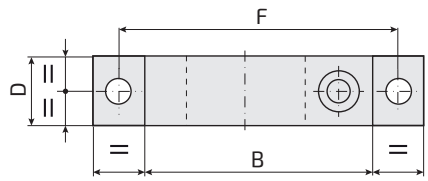

Order Code	Reference to Standards	For models...	A	B	Ø C	D	Ø E	F	G	H	J	K	M
FT 32	VDI 3003	AGS350, IGS150, TGS700, VV320-80, VV500, VV565	90	54	32	20	9	72	31	22	45	15	M8
FT 38	VDI 3003	AGS500, IGS250, TGS1000	95	59	38	20	9	77	34	25	55	15	M8
FT 45	VDI 3003	AGS750, IGS500, LGS500	100	64	45	20	9	82	37	28	60	15	M8
FT 50	ISO 11901-2, VDI 3003	AGS1000, IGS750, TGS2000, VV750	130	90	50	30	9	110	50	40	80	20	M8
FT 75	ISO 11901-2, VDI 3003	AGS2400, IGS1500, TGS5000, VV2385	160	115	75	30	11	137	63.5	52.5	105	20	M10
FT 95	ISO 11901-2, VDI 3003	AGS4200, IGS3000, TGS8000, VV2945	195	145	95	30	13.5	170	80	67.5	125	20	M12
FT 120	ISO 11901-2, VDI 3003	AGS6600, IGS5000, TGS12000	220	165	120	30	13.5	195	92.5	77.5	148	20	M12
FT 150	ISO 11901-2, VDI 3003	AGS9500, IGS7500	260	200	150	30	13.5	230	110	95	200	20	M12

ISO 11901-2

VDI 3003

This gas spring series includes the models compliant with automotive standards

BMW	B2 4009	**PSA**	E24.54.815.G
General Motors	90.25.455		

FT

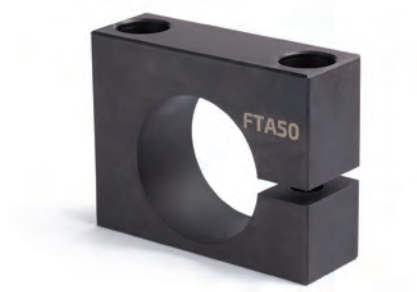

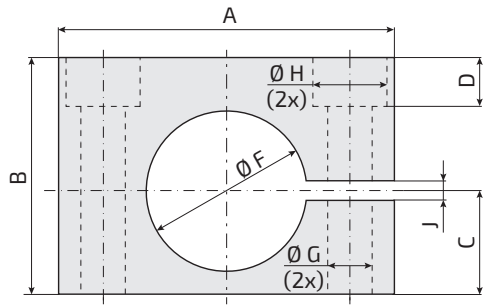

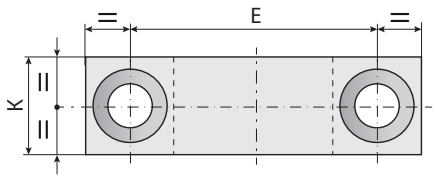

Front Support **FTA**

MAX
0.5 x diameter of the gas spring body

MIN
1/3 (one third) of dimension Lmin of the gas spring

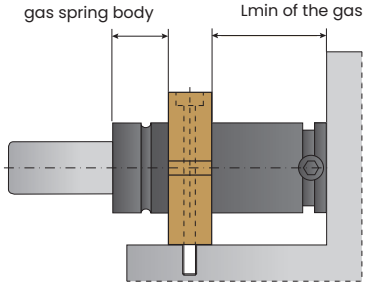

Dimension **MIN** must be respected to allow the over-pressure and over-stroke safety system to work properly (see dedicated catalogue section).

Order Code	Reference to Standards	For models...	A	B	C	D	E	Ø F	Ø G	Ø H	J	K
FTA 32	ISO 11901-2, VDI 3003	AGS350, IGS150, TGS700, VV320-80, VV500, VV565	68	48	20.9	10	50	32.5	9	15	4	20
FTA 38	ISO 11901-2, VDI 3003	AGS500, IGS250, TGS1000	74	54	23.9	16	54	38.5	9	15	4	20
FTA 45	ISO 11901-2, VDI 3003	AGS750, IGS500, LGS500	80	60	27.5	22	60	45.5	9	15	4	20
FTA 50	ISO 11901-2, VDI 3003	AGS1000, IGS750, TGS2000, VV750	90	70	30	25	68	50.5	11	18	5	30
FTA 63 A	ISO 11901-2, VDI 3003	AGS1500, TGS3000	108	82	36.5	27	84	63.5	11	18	5	30
FTA 63 B	-	AGS1500, TGS3000	105	80	40	11	80	63	10.5	17	10	30
FTA 75	ISO 11901-2, VDI 3003	AGS2400, IGS1500, TGS5000, VV2385	125	94	42	32	100	75.5	13.5	20	5	30
FTA 95	ISO 11901-2, VDI 3003	AGS4200, IGS3000, TGS8000, VV2945	140	115	52.5	33	115	95.5	13.5	20	5	30
FTA 120	ISO 11901-2, VDI 3003	AGS6600, IGS5000, TGS12000	170	140	65	58	145	120.5	13.5	20	7	30
FTA 150	ISO 11901-2, VDI 3003	AGS9500, IGS7500	200	170	80	68	175	150.5	13.5	20	7	30

ISO 11901-2 **VDI 3003**

This gas spring series includes the models compliant with automotive standards

BMW	B2 4009	**General Motors**	90.25.07
FCA	075.90.95	**MB**	B8 ...
Ford	W-DX35-62M	**VW**	39D 848

FTA

LINKED SYSTEM

LINKED SYSTEM EXAMPLES

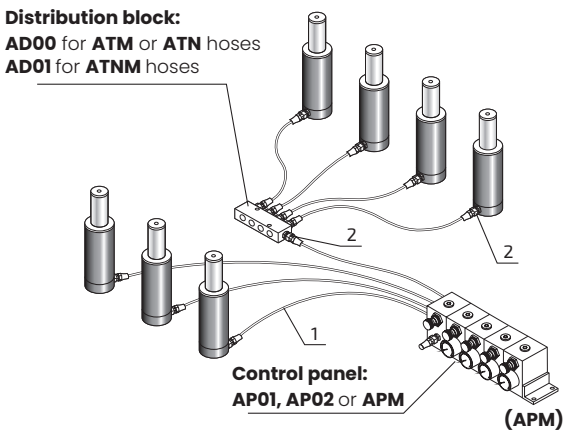

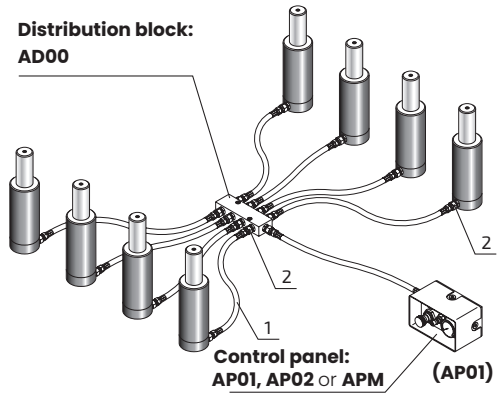

1- Hoses **ATM** or **ATNM**
2- Fitting **ARM** (for hoses ATM) or **ARN** (for hoses ATN) or **ARNN** (for hoses ATNM)

1- Hoses **AT**
2- Fittings **AR**

1

CHOOSE GAS SPRING MODEL

Gas spring models	Side port
AGS350~AGS2400	M6
IGS150, IGS250	
VV2385	
AGS4200~AGS20000	G1/8
IGS500~IGS10000	
LGS500	
VV750, VV2945	

2

CHOOSE HOSE MODEL

For gas springs with M6 side port

For gas springs with G1/8 side port

ATNM
Hose Ø 5 mm
(Micro-type)

ATM
Hose Ø 5 mm
(Minimess-type)

ATN
Hose Ø 5 mm
(for small available spaces)

AT
Hose Ø 8 mm
(for big available spaces)

3

CHOOSE PROPER FITTINGS

ARNM
For hoses ATNM
Ø 5 mm

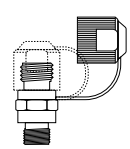

ARM
For hoses ATM
Ø 5 mm

ARN
For hoses ATN
Ø 5 mm

AR
For hoses AT
Ø 8 mm

LINKED SYSTEM

4

CHOOSE CONTROL PANEL MODEL

AP01
Standard

AP02
Compact

APM
Modular

... and other available models

5

DISTRIBUTION BLOCKS (IF NEEDED)

AD01

AD00

6

CONNECTING THE GAS SPRINGS

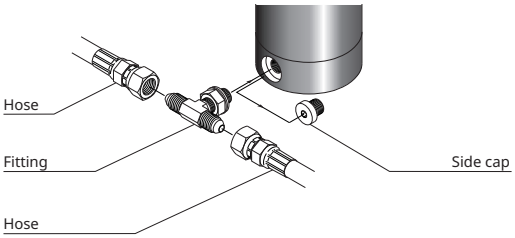

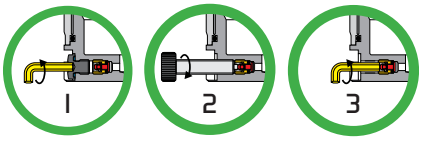

Discharge the gas spring and remove the valve before connecting to system

ATTENTION !
Follow the "USE INSTRUCTIONS" page before connecting the gas springs

7

CHARGING AND DISCHARGING

COMPL
Charging and discharging set (also for self-contained gas springs)

CUC01
Charging unit
(also for self-contained gas springs) included in the complete set COMPL

AN-1/4
Charging adapter for the quick coupling on the control panels

Hoses ø5 mm and fittings (MINIMESS-type)

Assembly

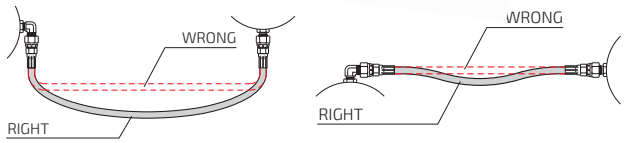

Flexible hose diameter 5 mm with fittings, for connecting nitrogen gas springs and manyother devices.

HOSE Mechanical specifications

- Working temperature: -40 +100 °C
- Working pressure: max 630 bar
- Minimum bending radius: 20 mm
- Outside diameter: 5 mm

TECHNICAL NOTES

Choose the proper hose length considering the "Assembly" indications.

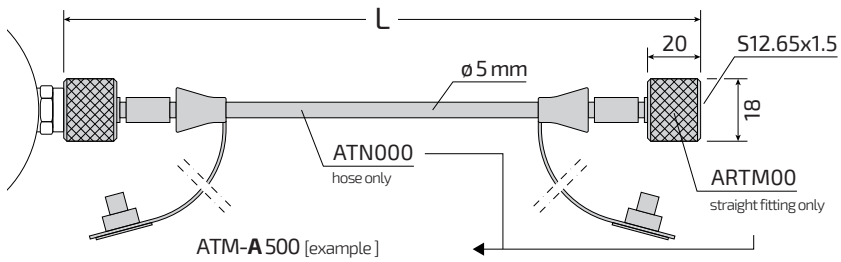

ATM-**A** 500 [example]
(hose complete with no. 2 crimped-on **straight** fittings, length L = 500 mm [example], ready for use)

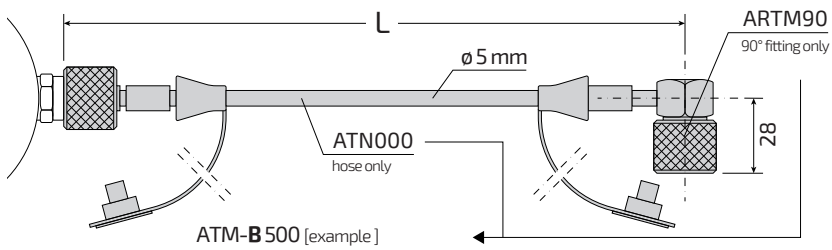

ATM-**B** 500 [example]
(hose complete with no. 2 crimped-on fittings (**straight** + **90°**), length L = 500 mm [example], ready for use)

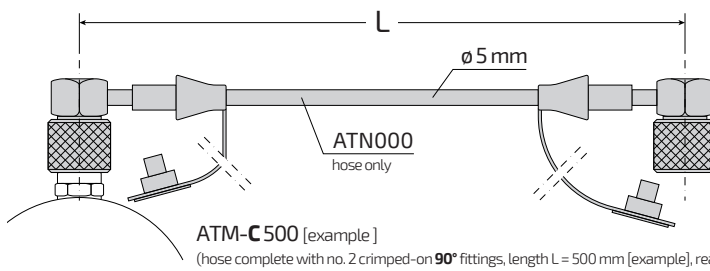

ATM-**C** 500 [example]
(hose complete with no. 2 crimped-on **90°** fittings, length L = 500 mm [example], ready for use)

ORDER HOSE cod. ATN000 (quantity in metres, for example: "ATN000 10 m") and FITTINGS cod. ARTM00/ARTM90 for SELF-CUTTING and SELF-CRIMPING

Length of standard hoses, fittings included (Different lengths can be prepared on request - Minimum lengths: see "L MIN")

Order Code	L
ATM-.... 150	150
ATM-... 175	175
ATM-... 200	200
ATM-... 250	250
ATM-... 300	300
ATM-... 350	350
ATM-.... 400	400
ATM-... 500	500

Order Code	L
ATM-... 600	600
ATM-... 700	700
ATM-... 800	800
ATM-... 900	900
ATM-... 1000	1000
ATM-... 1500	1500
ATM-... 2000	2000

Order Code	L
ATM - A	90
ATM - B	95
ATM - C	105

*** No plastic caps for L < 150 mm**

Fittings for ATM Hoses (MINIMESS-type)

Fittings for linking gas springs, control panels and distribution blocks

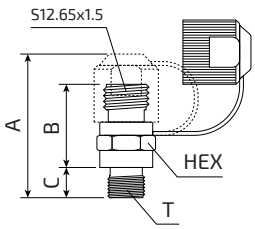

Order Code	A	B	C	T	HEX	Tightening torque	Non-return valve
ARM000-1/8	48	30	8	G1/8	14	ca. 18	NO
ARM000-1/8V	48	30	8	G1/8	14	ca. 18	YES
ARM000-1/4	43	21	12	G1/4	19	ca. 45	NO
ARM000-1/4V	43	21	12	G1/4	19	ca. 45	YES

ATTENTION ! Use fittings without non-return valve when connecting gas springs and other devices to open system (hose system).

Order Code: ARM270 - M6

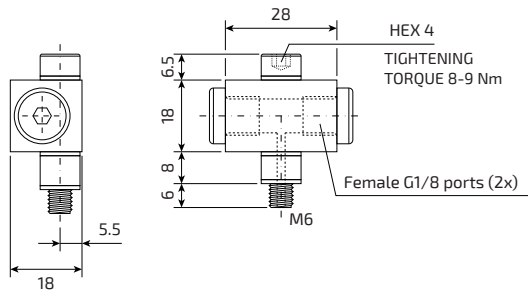

Order Code: ARM270R - M6

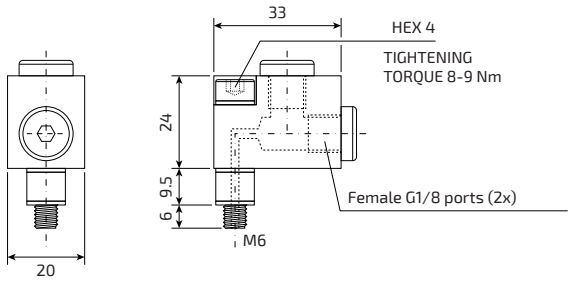

Order Code: ARM270 - 1/8

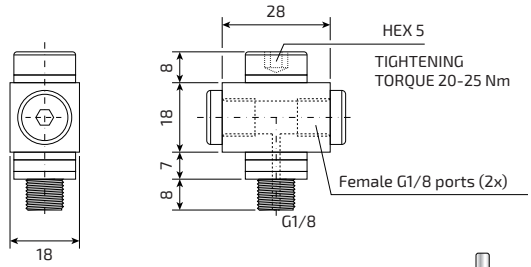

Extension fittings which may be needed in case of fixing with half-flanges

Order Code: ARM090 - 1/8

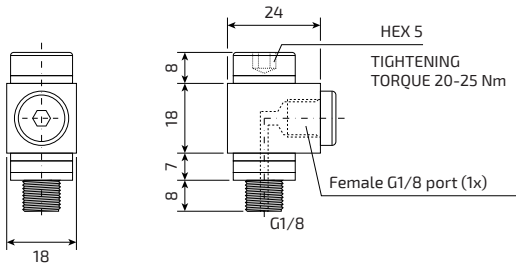

PL - M6

8-9 Nm
HEX 10

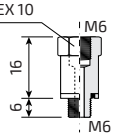

PL-1/8A

20-25 Nm
HEX 17

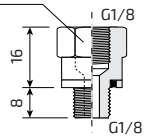

PL-1/8B

20-25 Nm
HEX 17

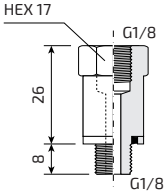

M6 to G1/8 side port converter

ARNMF

8-9 Nm
HEX 14

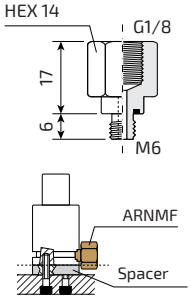

OTHER ACCESSORIES

Order Code: CFT-5

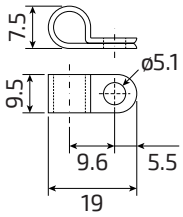

HOSE CLIP
FOR HOSES Ø5 mm
(10 pc. box)

Hoses ø 5 mm and fittings (MICRO-type)

Flexible hose diameter 5 mm with fittings, for connecting nitrogen gas springs and many other devices.

HOSE Mechanical specifications

- Working temperature: -40 +100 °C
- Working pressure: max 630 bar
- Minimum bending radius: 20 mm
- Outside diameter: 5 mm

TECHNICAL NOTES

Calculating hose length:

L = (A - 20) x 1.05 (dimensions in millimetres)

L = Hose length (fittings included)

A = Distance between gas springs to be connected

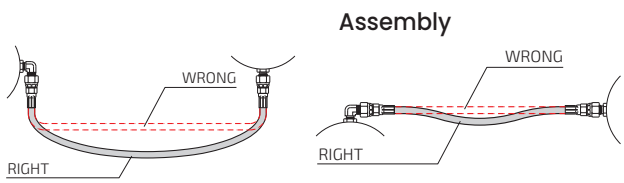

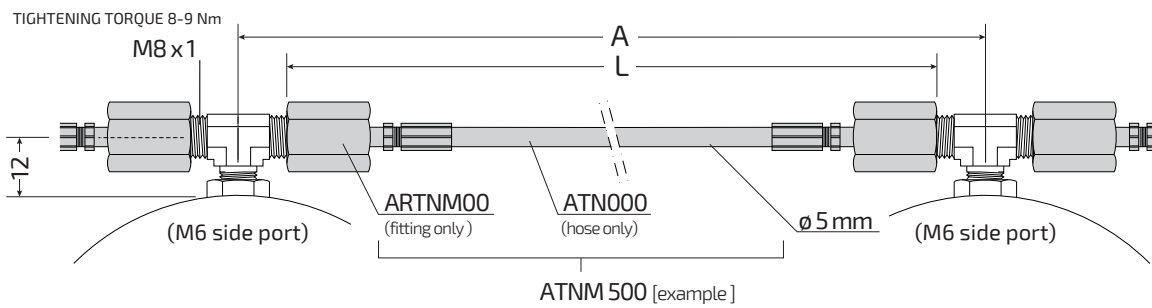

ORDER HOSE cod. ATN000 (quantity in metres, for example: "ATN000 10 m") and FITTINGS cod. ARTNM00 for SELF-CUTTING and SELF-CRIMPING

Length of standard hoses, fittings included (Different lengths can be prepared on request - Minimum length L = 90 mm)

Order Code	A	L
ATNM 100	115	100
ATNM 125	139	125
ATNM 150	163	150
ATNM 175	187	175
ATNM 200	210	200
ATNM 250	258	250

Order Code	A	L
ATNM 300	306	300
ATNM 350	353	350
ATNM 400	401	400
ATNM 500	496	500
ATNM 600	591	600
ATNM 700	687	700

Order Code	A	L
ATNM 800	782	800
ATNM 900	877	900
ATNM 1000	972	1000
ATNM 1500	1449	1500
ATNM 2000	1925	2000

Fittings for ATNM hoses (MICRO-type)

Fittings for linking gas springs, control panels and distribution blocks

Order Code: ARNM000

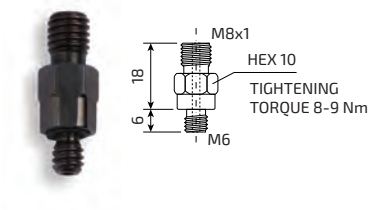

Order Code: ARNM000CP

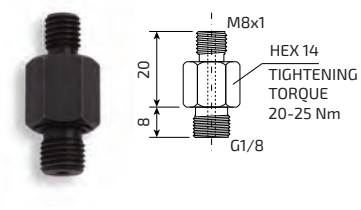

Order Code: ARNM00P

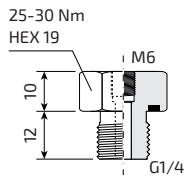

Order Code: ARNM090

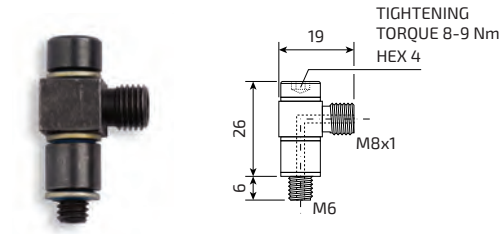

Order Code: ARNM270R

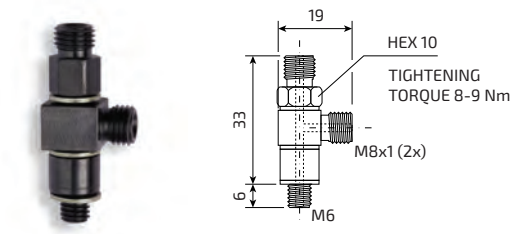

Order Code: ARNM270

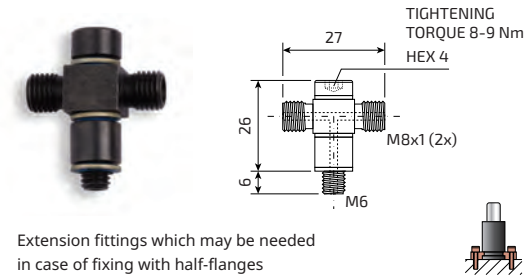

Extension fittings which may be needed in case of fixing with half-flanges

Order Code: ARNM360

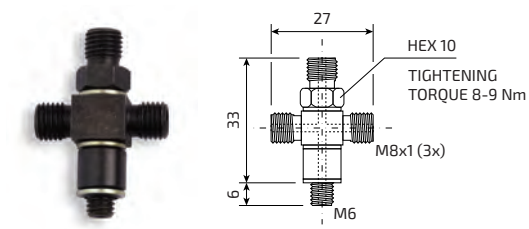

PL - M6

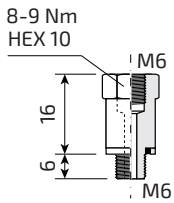

FITTINGS FOR HOSE-HOSE CONNECTION

Order: ARNM270T

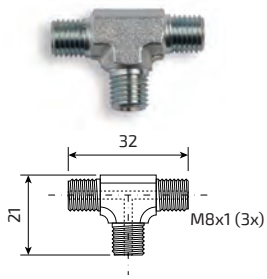

Order: ARNM360T

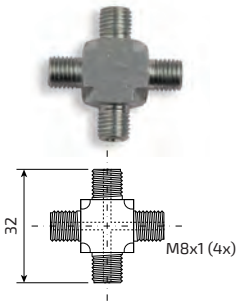

OTHER ACCESSORIES

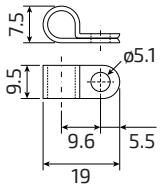

HOSE CLIP
FOR HOSES ø5 mm
(10 pc. box)

Hoses ø 5 mm and fittings

Flexible hose diameter 5 mm with fittings, for connecting nitrogen gas springs and many other devices.

HOSE Mechanical specifications

- Working temperature: -40 +100 °C
- Working pressure: max 630 bar
- Minimum bending radius: 20 mm
- Outside diameter: 5 mm

TECHNICAL NOTES

Calculating hose length:

L = (A - 25) x 1.05 (dimensions in millimetres)

L = Hose length (fittings included)

A = Distance between gas springs to be connected

Assembly

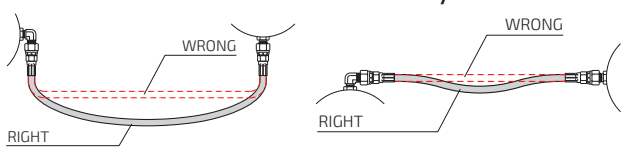

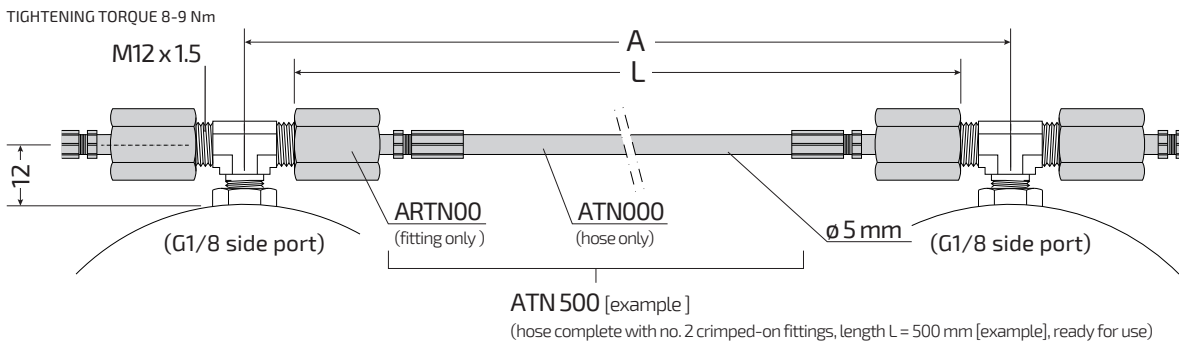

ORDER HOSE cod. ATN000 (quantity in metres, for example: "ATN000 10 m") and FITTINGS cod. ARTN00 for SELF-CUTTING and SELF-CRIMPING

Length of standard hoses, fittings included (Different lengths can be prepared on request - Minimum length L = 90 mm)

Order Code	A	L
ATN 100	120	100
ATN 125	144	125
ATN 150	168	150
ATN 175	192	175
ATN 200	215	200
ATN 250	263	250

Order Code	A	L
ATN 300	311	300
ATN 350	358	350
ATN 400	406	400
ATN 500	501	500
ATN 600	596	600
ATN 700	692	700

Order Code	A	L
ATN 800	787	800
ATN 900	882	900
ATN 1000	977	1000
ATN 1500	1454	1500
ATN 2000	1930	2000

Fittings for ATN hoses

Fittings for linking gas springs, control panels and distribution blocks

Order Code: ARN000

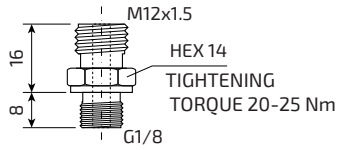

Order Code: ARN000 - 1/4

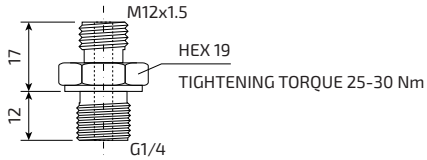

Order Code: ARN090

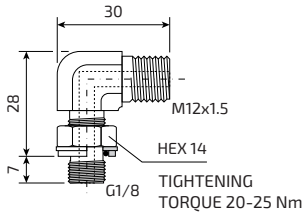

Order Code: ARN270R

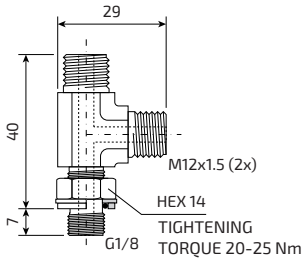

Order Code: ARN045

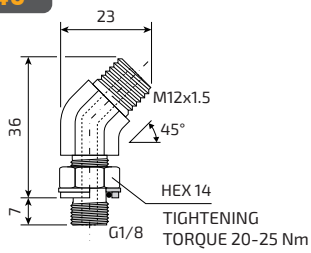

Extension fittings which may be needed
in case of fixing with half-flanges

Order Code: ARN270

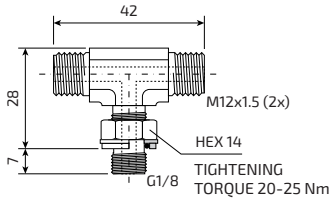

PL-1/8A

20-25 Nm
HEX 17

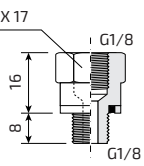

PL-1/8B

HEX 17 20-25 Nm

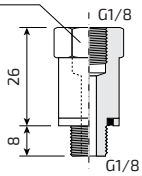

ARNMF M6 to G1/8 side port converter

8-9 Nm
HEX 14

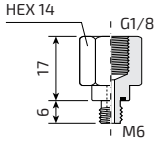

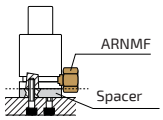

FITTINGS FOR HOSE-HOSE C ONNECTION

Order Code: ARN270T

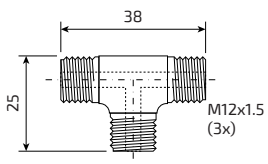

Order Code: ARN360T

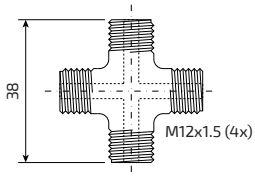

OTHER ACCESSORIES

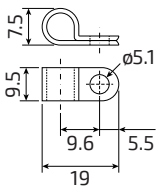

HOSE CLIP
FOR HOSES ø5 mm
(10 pc. box)

Hoses ø 8 mm and fittings

Flexible hose diameter 8 mm with fittings, for connecting nitrogen gas springs and many other devices.

HOSE Mechanical specifications

- Working temperature: -40 +100 °C
- Working pressure: max 630 bar
- Minimum bending radius: 20 mm
- Outside diameter: 5 mm

Assembly

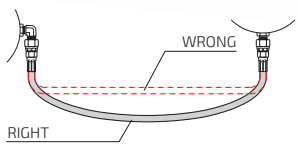

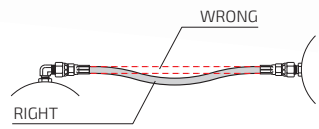

TECHNICAL NOTES

Calculating hose length:

L = (A - 25) x 1.05 (dimensions in millimetres)

L = Hose length (fittings included)

A = Distance between gas springs to be connected

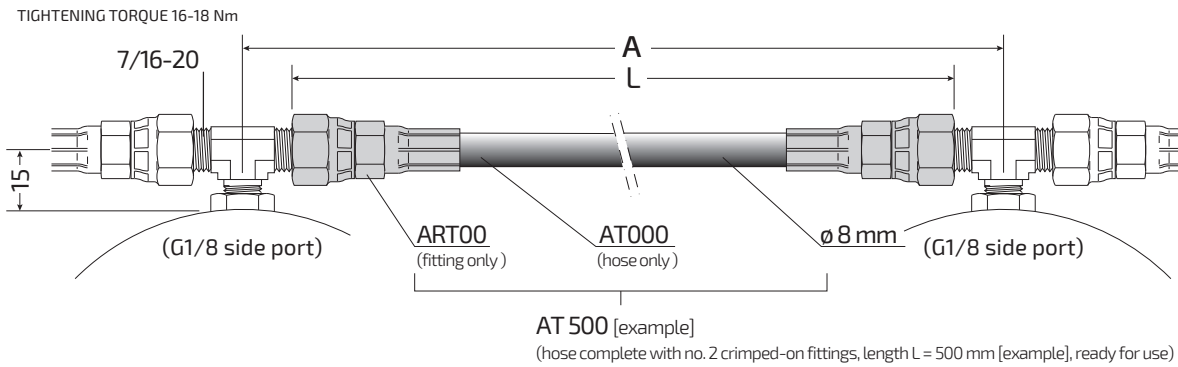

ORDER HOSE cod. AT000 (quantity in metres, for example: "AT000 10 m") and FITTINGS cod. ART00 for SELF-CUTTING and SELF-CRIMPING

Length of standard hoses, fittings included (Different lengths can be prepared on request - Minimum length L = 90 mm)

Order Code	A	L
AT 125	144	125
AT 150	168	150
AT 175	192	175
AT 200	215	200
AT 250	263	250

Order Code	A	L
AT 300	311	300
AT 350	358	350
AT 400	406	400
AT 500	501	500
AT 600	596	600
AT 700	692	700

Order Code	A	L
AT 800	787	800
AT 900	882	900
AT 1000	977	1000
AT 1500	1454	1500
AT 2000	1930	2000

Fittings for AT hoses

Fittings for linking gas springs, control panels and distribution blocks

Order Code: AR000

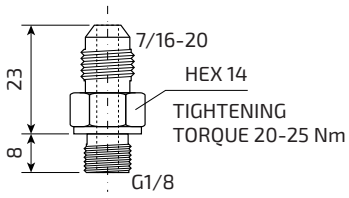

Order Code: AR000 - 1/4

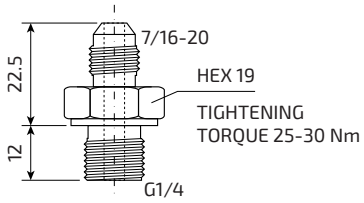

Order Code: AR090

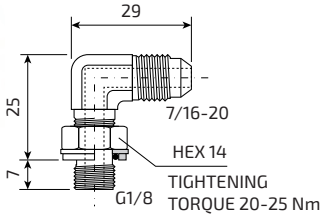

Order Code:AR270R

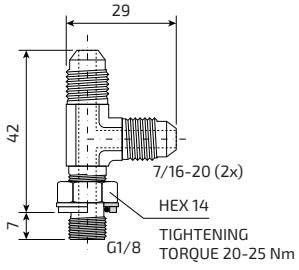

Order Code: AR045

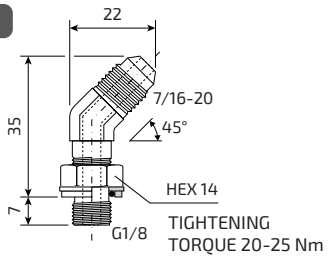

Extension fittings which may be needed in case of fixing with half-flanges

Order Code:AR270

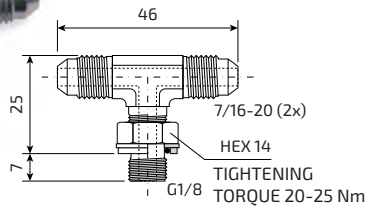

PL-1/8A

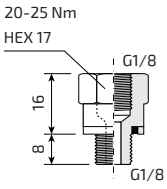

PL-1/8B

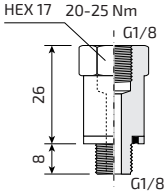

ARNMF M6 to G1/8 side port converter

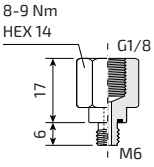

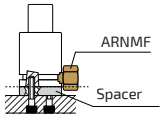

FITTINGS FOR HOSE-HOSE C ONNECTION

Order Code: AR270T

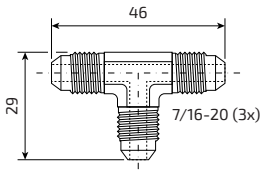

Order Code: AR360T

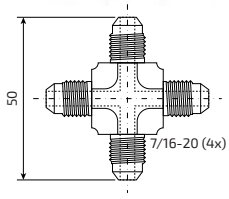

OTHER ACCESSORIES

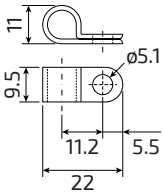

HOSE CLIP
FOR HOSES ø8 mm
(10 pc. box)

CONTROL PANEL AP01

This panel allows to charge and discharge a nitrogen gas spring or a nitrogen gas springs system, and to monitor the pressure.

TECHNICAL NOTES

A - No. 3 connection ports (G1/8)
B - Discharging valve
C - Plug ready for safety pressure switch
D - Charging valve (use only with CUC01 or COMPL or BOOSTER)
E - Pressure gauge
F - No. 2 fixing holes for M6 hex-socket screws
G - The connection ports are plugged

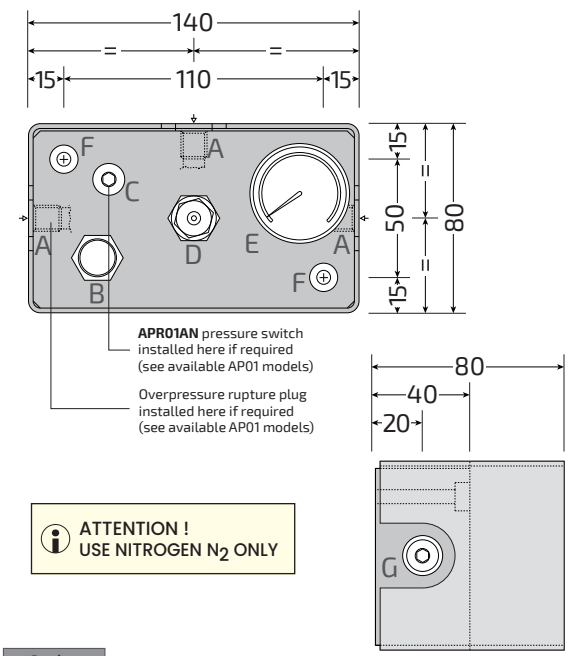

ATTENTION !
USE NITROGEN N_2 ONLY

Order Code	
AP01	Control panel
AP01PAN	Control panel with APR01AN pressure switch (50-300 bar normally open)
AP01RP	Control panel with overpressure rupture plug
AP01F	Control panel with APR01AN pressure switch (50-300 bar normally open) and with overpressure rupture plug

CONTROL PANEL (COMPACT) AP02

This compact panel allows to charge and discharge a nitrogen gas spring or a nitrogen gas springs system, and to monitor the pressure.

TECHNICAL NOTES

A - Charging valve (use only with CUC01 or COMPL or BOOSTER)
B - Discharging valve
C - Pressure gauge
***** No. 2 fixing holes for M5 hex-socket screws
***** No. 5 connection ports (G1/8)
***** The connection ports are plugged

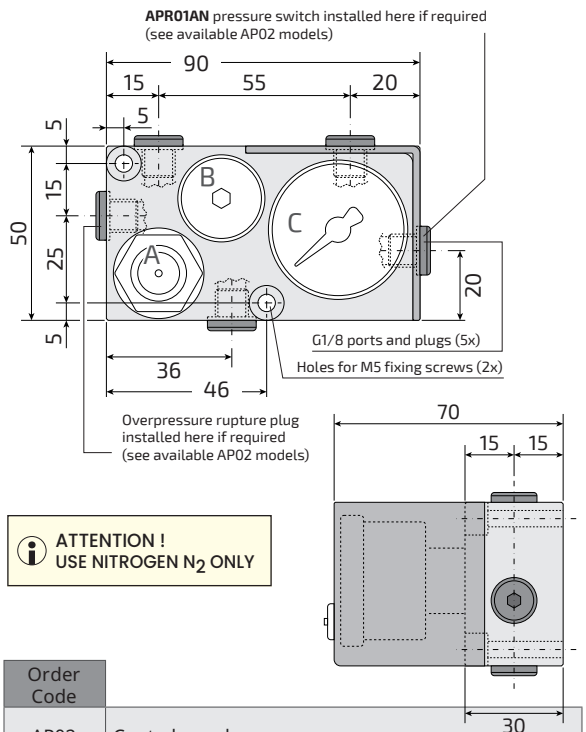

ATTENTION !
USE NITROGEN N_2 ONLY

Order Code	
AP02	Control panel
AP02PAN	Control panel (compact version) with APR01AN pressure switch (50-300 bar normally open)
AP02RP	Control panel (compact version) with overpressure rupture plug
AP02F	Control panel (compact version) with APR01AN pressure switch (50-300 bar normally open) and with overpressure rupture plug

Add "LOCK" after the control panel code to receive it with lockable discharging valve for Lockout-Tagout applications.
Order padlock (code: P ADLOCK) separately (also usable with BRADY part no. 850821 padlock).
Example: "AP01FLOCK" = control panel AP01F with lockable discharging valve.

All models are available with safety valve VS500 already assembled (on request).

CONTROL PANEL (COMPACT) AP03

This compact panel allows to charge and discharge a nitrogen gas spring or a nitrogen gas springs system, and to monitor the pressure.

TECHNICAL NOTES

A - Charging valve (use only with CUC01 or COMPL or BOOSTER)
B - Discharging valve
C - Pressure gauge
D - No. 3 connection ports G1/4
E - No. 2 connection ports G1/8
***** The connection ports are plugged
***** No. 2 fixing holes for M6 hex-socket screws

ATTENTION !
USE NITROGEN N_2 ONLY

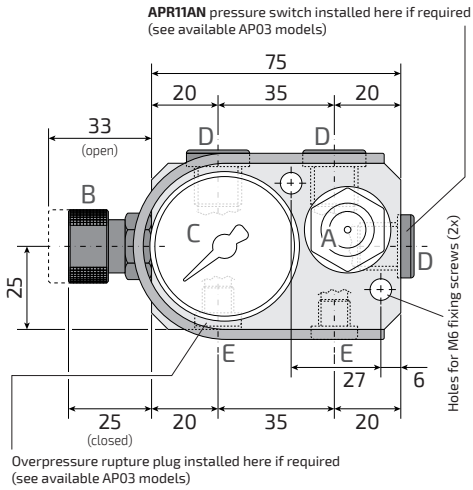

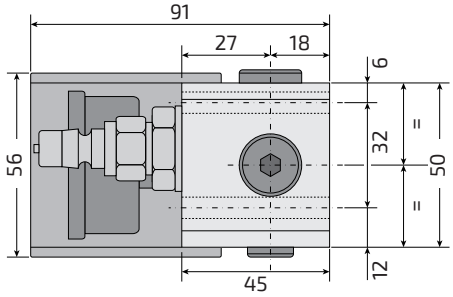

Order Code	
AP03	Control panel (compact version)
AP03PAN	Control panel (compact version) with APR11AN pressure switch (50-300 bar normally open)
AP03RP	Control panel (compact version) with overpressure rupture plug
AP03F	Control panel (compact version) with APR11AN pressure switch (50-300 bar normally open) and with overpressure rupture plug

CONTROL PANEL AP04

This panel allows to charge and discharge a nitrogen gas spring or a nitrogen gas springs system, and to monitor the pressure.

TECHNICAL NOTES

A - Charging valve (use only with CUC01 or COMPL or BOOSTER)
B - Discharging valve
C - Pressure gauge
D - No. 1 connection port G1/4
E - No. 7 connection ports G1/8
***** The connection ports are plugged
***** No. 2 fixing holes for M10 hex-socket screws

ATTENTION !
USE NITROGEN N_2 ONLY

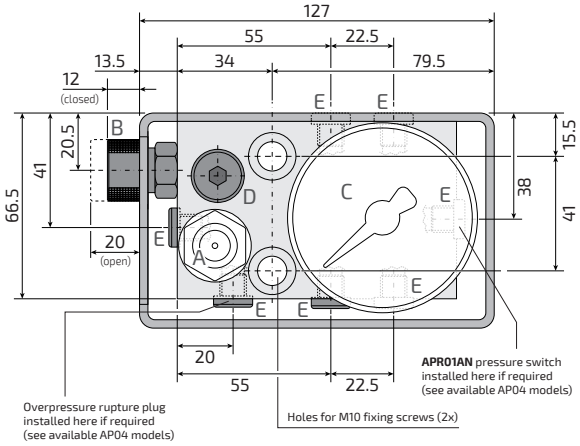

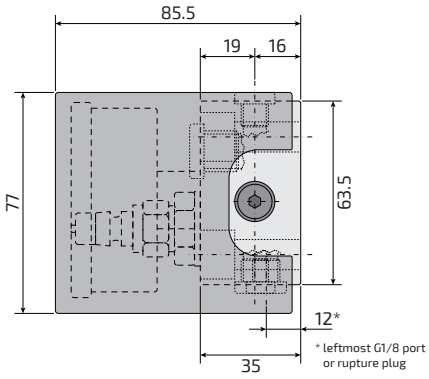

Order Code	
AP04	Control panel
AP04PAN	Control panel with APR01AN pressure switch (50-300 bar normally open)
AP04RP	Control panel with overpressure rupture plug
AP04F	Control panel with APR01AN pressure switch (50-300 bar normally open) and with overpressure rupture plug

All models are available with safety valve VS500 already assembled (on request).

CONTROL PANEL AP05

This panel allows to charge and discharge a nitrogen gas spring or a nitrogen gas springs system, and to monitor the pressure.

TECHNICAL NOTES

A - Charging valve (use only with CUC01 or COMPL or BOOSTER)
B - Discharging valve
C - Pressure gauge
D - No. 9 connection ports G1/4
E - No. 1 connection port G1/8
* The connection ports are plugged
* No. 2 fixing holes for M8 hex-socket screws
* Shut off valve for protecting the pressure gauge from pulsating pressure during operation

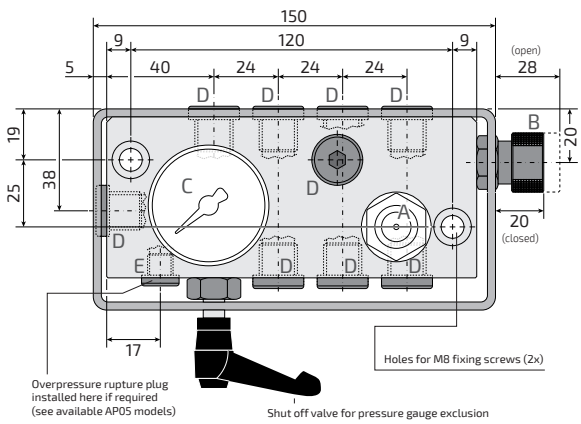

ATTENTION ! USE NITROGEN N_2 ONLY

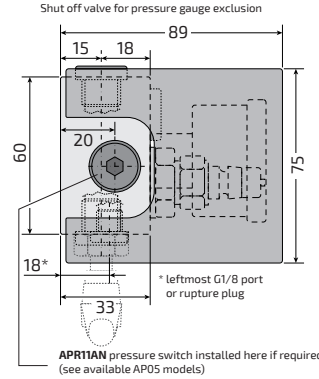

Order Code	
AP05	Control panel
AP05PAN	Control panel with APR11AN pressure switch (50-300 bar normally open)
AP05RP	Control panel with overpressure rupture plug
AP05F	Control panel with APR11AN pressure switch (50-300 bar normally open) and with overpressure rupture plug

AP06

CONTROL PANEL (MICRO-TYPE PORTS)

This panel allows to charge and discharge a nitrogen gas spring or a nitrogen gas springs system, and to monitor the pressure.

TECHNICAL NOTES

A - Charging valve (use only with CUC01 or COMPL or BOOSTER)
B - Discharging valve
C - Pressure gauge
D - No. 1 connection port G1/4
E - No. 1 connection port G1/8
F - No. 15 connection ports M6 (5x top, 5x bottom, 5x rear)
* The connection ports are plugged
* No. 6 (4x + 2x) fixing holes for M6 hex-socket screws

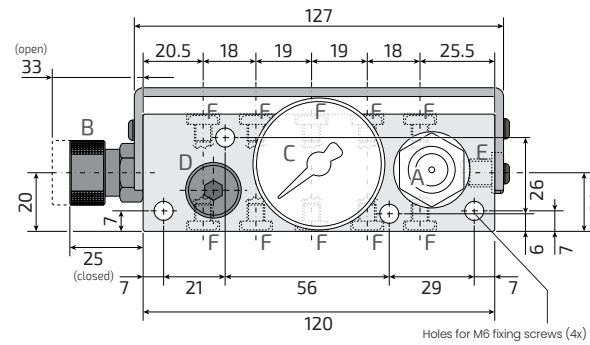

ATTENTION ! USE NITROGEN N_2 ONLY

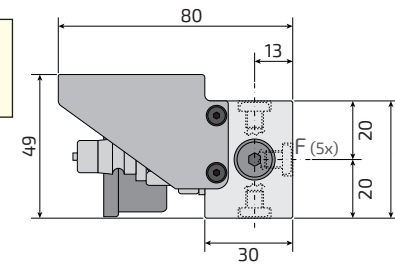

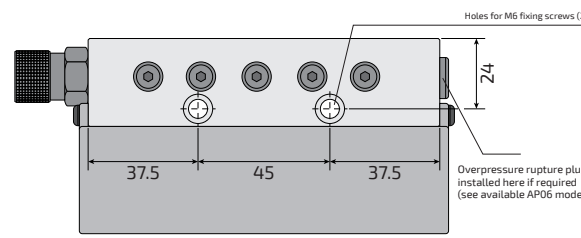

Order Code	
AP06	Control panel (MICRO-type ports)
AP02RP	Control panel (MICRO-type ports) with overpressure rupture plug

All models are available with safety valve VS500 already assembled (on request).

APM - MODULAR CONTROL PANEL

ATTENTION !
USE NITROGEN N_2 ONLY

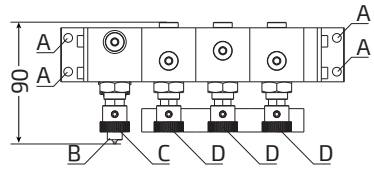

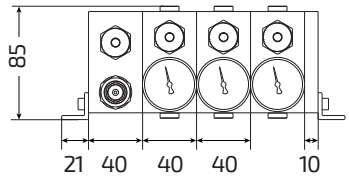

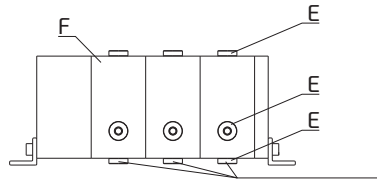

Overpressure rupture plugs (one for each module) installed here if required (see available APM models)

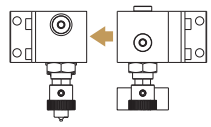

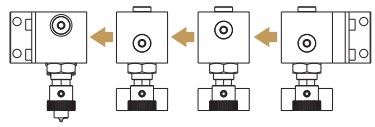

This panel allows to charge and discharge a nitrogen gas spring, or a nitrogen gas springs system, or multiple independent nitrogen gas springs systems, and to monitor the pressure. Each module can be charged at a different pressure.

TECHNICAL NOTES

A - M5 fixing hole
B - Quick coupling for nitrogen N2 charging with charging set COMPL or CUC01 or BOOSTER
C - Discharging valve
D - Single-module charging or discharging valve (always turned off during use)
E - Connection ports (G1/8)
F - Each module may be connected with more nitrogen gas springs

It allows to check the pressure of each module separately
No limit as to the quantity of connectible modules

Order Code	EXPLANA TION
APM1	Control panel with 1 module
APM2	Control panel with 2 modules
APM3	Control panel with 3 modules
APM4	Control panel with 4 modules
APMX	Control panel with X modules

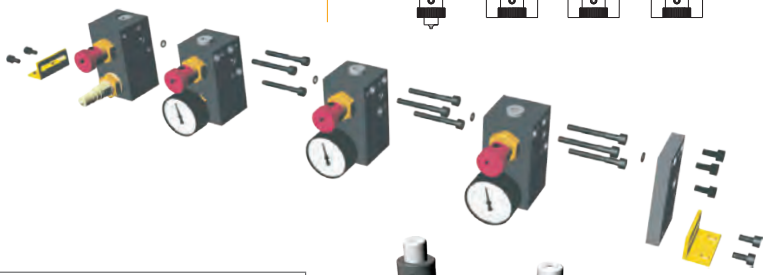

Order Code	EXPLANA TION
APM1RP	Control panel with 1 module, with overpressure rupture plug
APM2RP	Control panel with 2 modules, with 2 pcs. overpressure rupture plugs
APM3RP	Control panel with 3 modules, with 3 pcs. overpressure rupture plugs
APM4RP	Control panel with 4 modules, with 4 pcs. overpressure rupture plugs
APMXRP	Control panel with X modules, with X pcs. overpressure rupture plugs

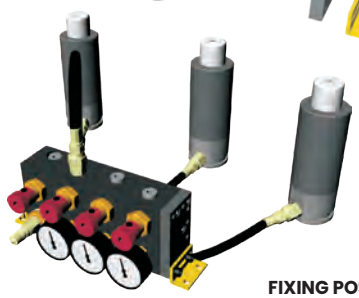

FIXING POSSIBILITIES

USE INSTRUCTIONS

Nitrogen N_2 charging:
1 - Assemble modular control panel, fix it onto the die and connect the nitrogen gas springs.
2 - Turn off all the valves.
3 - Connect N_2 tank via the quick coupling, and turn it on slowly.
4 - Turn on slowly the valve of the module to be charged and turn it off once the required pressure is reached.
It allows to check the pressure of each module separately No limit as to the quantity of connectible modules
5 - Turn off the N_2 tank, then turn on the discharging valve.
6 - Disconnect the N_2 tank and turn off the discharging valve.
Nitrogen N_2 discharging:
1 - Turn on the discharging valve and then turn on the valve of the module to be discharged.
2 - Once the required pressure is reached, turn off both valves.

Safety pressure switches

DIGITAL

Digital pressure switch that can be set from 6 to 600 bar, available for the assembly on control panels.

TECHNICAL NOTES

- No. 2 PNP transistor switching outputs
- Switching current: max 250 mA per output
- Technical data sheet on request

Order Code	Thread
APR02	G1/8
APR12	G1/4

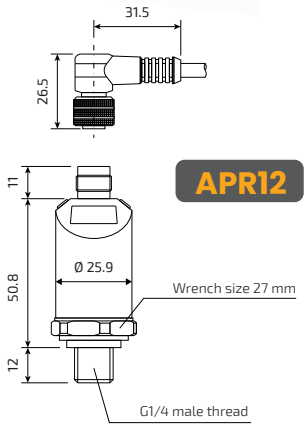

TIGHTENING TORQUE 25-30 nm

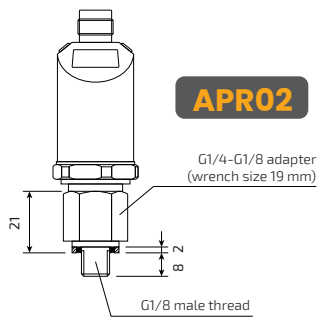

TIGHTENING TORQUE 20-25 nm

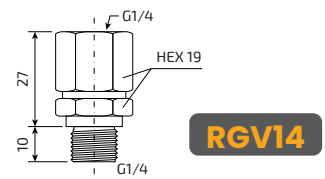

Swivel fitting for pressure switch orientation (for APR02 model: install between pressure switch body and G1/4-G1/8 adapter - see drawing

ANALOG

Pressure switches, which can be set from 50 to 150-300 bar depending on model, available for the assembly on control panels.

Order Code	T	Tight. tor que Nm	A mm	Range bar	Type	MAX voltage	MAX curr ent
APR01A	G1/8	20-25	8	50-150	Normally open	48V ac/dc	0.5 A
APR01AN	G1/8	20-25	8	50-300	Normally open	48V ac/dc	0.5 A
APR11A	G1/4	25-30	10	50-150	Normally open	48V ac/dc	0.5 A
APR11AN	G1/4	25-30	10	50-300	Normally open	48V ac/dc	0.5 A

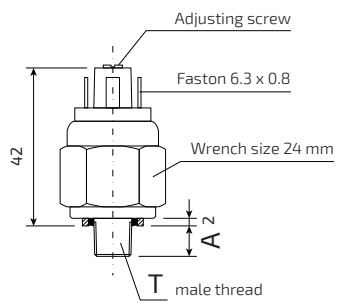

SAFETY VALVE

Overpressure safety valve, available for the assembly on control panels.

TECHNICAL NOTES

- Nominal activation pressure: 500 bar
- In case of valve activation, contact Bordignon for reparation

Order Code	T	Tight. tor que Nm	A mm
VS500	G1/8	20-25	8
VS500-1/4	G1/4	25-30	10

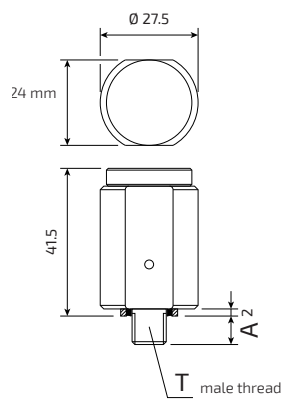

DISTRIBUTION BLOCKS

The distribution blocks allow several gas springs to be connected in a battery. Each block can connect several gas springs equipped with side port, and several blocks can be interconnected. Choose the proper fittings for hose connection.

AD00

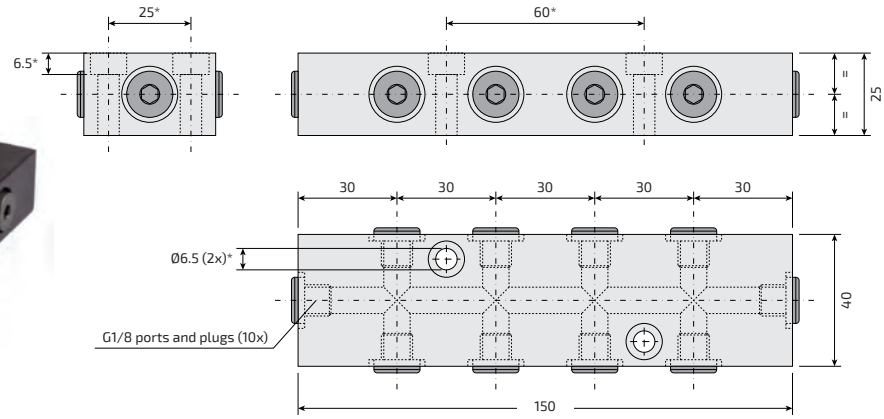

* For M6 fixing screws (2x)

AD01

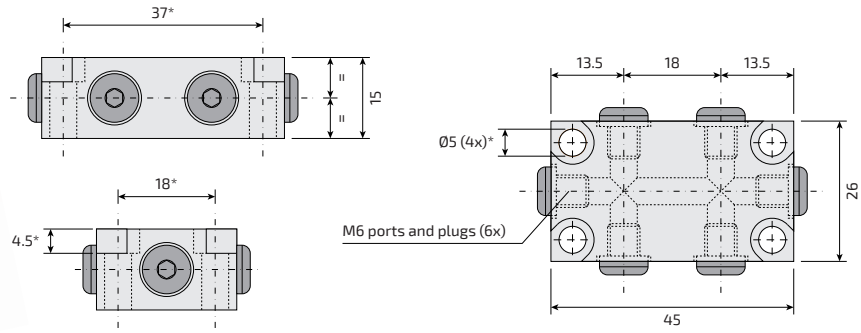

* For M4 fixing screws (4x)

FITTINGS FOR CONNECTING SEVERAL DISTRIBUTION BLOCKS

Order Code: **AR000**

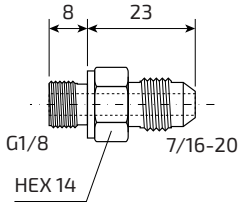

TIGHTENING TORQUE 20-25 Nm
(only for AD00 with G1/8 ports)

Order Code: **AR000G**

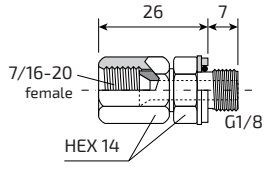

TIGHTENING TORQUE 20-25 Nm
(only for AD00 with G1/8 ports)

Charging and discharging set

Order Code: COMPL

Complete series of charging unit, charging adapters and discharging devices, for both self-contained gas springs and control panels

Charging unit

Order Code: CUC01

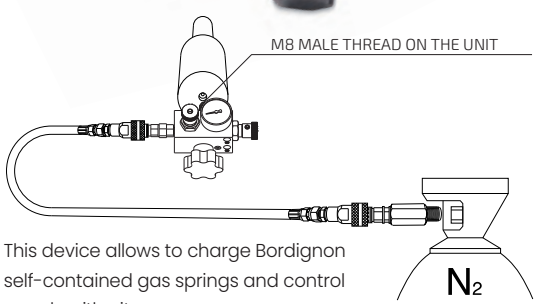

This device allows to charge Bordignon self-contained gas springs and control panels with nitrogen gas.

Order Code: ATAP01

Extension hose (length: 2 metres) for an easier charging of control panels

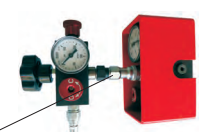

(AN-1/4 charging adapter for control panels)

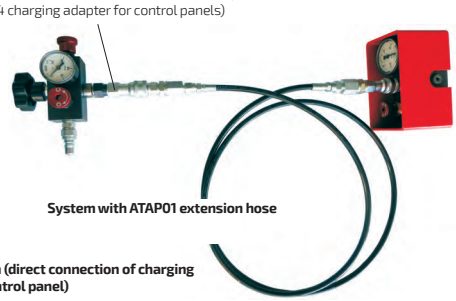

System with ATAP01 extension hose

Standard system (direct connection of charging unit CUC01 to control panel)

Charging adapters

Adapters for the nitrogen gas springs charging unit (only for gas springs with charging hole different from M8). Gas springs with charging hole M8 (not listed in table below) must be charged with CUC01 unit with no adapter.

	Order Coder	For gas spring models...	Control panels
M4 / M8	AN-M4	EGS16, TGS700	-
M5 / M8	AN-M5	EGS24	-
M6 / M8	AN-M6	AGS170-AGS320, TGS400, VGS (all models) VV170, VV320-63/63H VV320-80, VV500, VV565	-
M6 / M8	AN-M6/2	AGS350~AGS2400 IGS150-IGS250, VV2385	-
G1/8 / M8	AN-1/8	AGS4200~AGS2000, IGS500~IGS10000 LGS500, VV750, VV2945	-
Quick coupling / M8	AN-1/4	-	All models

Discharging devices

Devices for discharging the nitrogen gas springs.

	Order Coder	For gas spring models...	Control panels
M4	ADS-M4/2	TGS700	-
M4	ADS-M4/3	EGS16	-
M5	ADS-M5/2	EGS24	-
M6	ADS-M6	TGS400	-
M6	ADS-M6/2	AGS170-AGS320	-
M6	ADS-M6/3	AGS350~AGS20000, IGS (all models) LGS500, VV750, VV2385, VV2945	-
M6	ADS-M6/4	VGS (all models), VV170, VV320-63/63H VV320-80, VV500, VV565	-
M8	ADS-M8	TGS1000~TGS12000	-

Booster for Nitrogen N_2

Order Code: BOOSTER

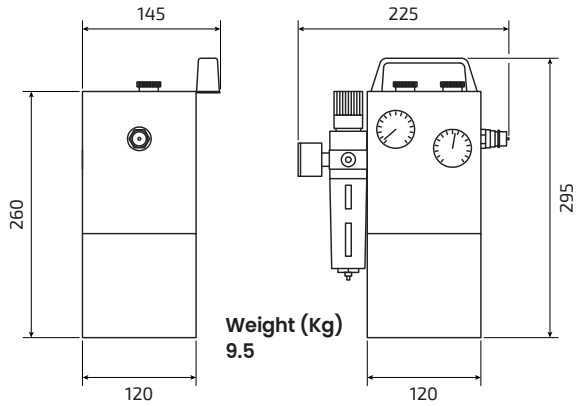

Weight (Kg)
9.5

USE INSTRUCTIONS

- Connect nitrogen N_2 tank (with minimum pressure 20 bar) to the Booster.
- Connect Booster to the nitrogen gas spring (it's necessary to have the charging set mod. compl).
- Connect the compressed air (max pressure 8 bar; use lubricatedair when working continuously for more than 30 minutes).
- Turn off the discharging valve. • Turn on the charging valve of the Booster.
- Turn on the compressed air and slowly turn on nitrogen N_2 tank.
- When the nitrogen gas spring has reached the required pressure turn the charging valve off, turn on discharging valve and disconnect the nitrogen gas spring. • Once finished, turn off both the compressed air and the nitrogen N_2 tank.

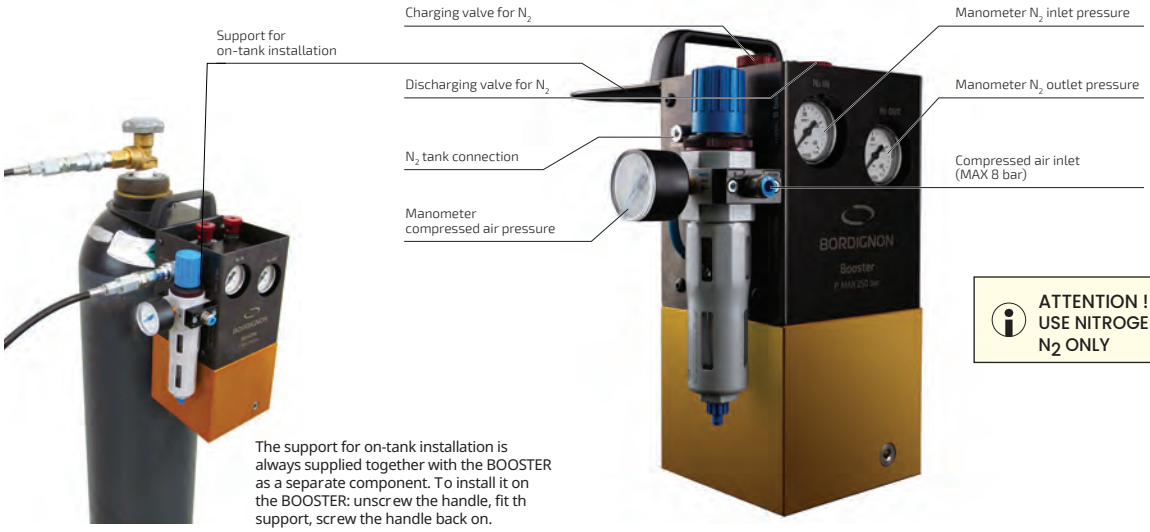

The support for on-tank installation is always supplied together with the BOOSTER as a separate component. To install it on the BOOSTER: unscrew the handle, fit th support, screw the handle back on.

ATTENTION ! USE NITROGEN N_2 ONLY

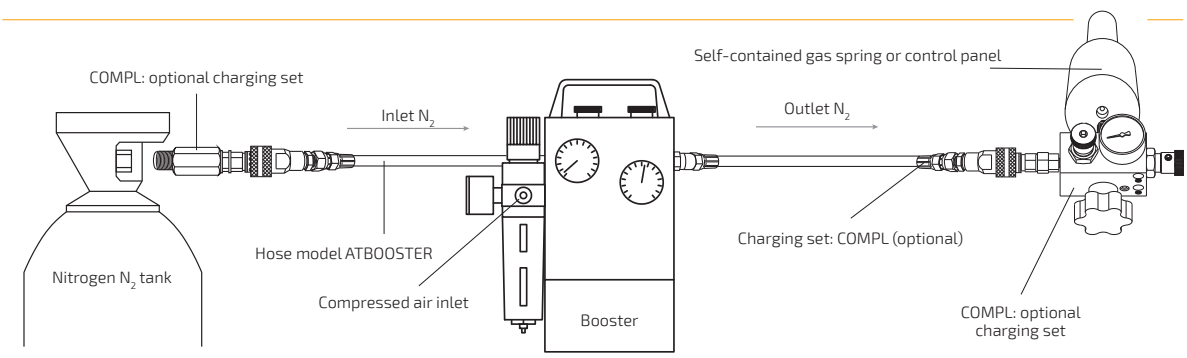

Max reachable outlet nitrogen pressure in relation to the compressed air pressure			
Compressed air pressure (bar)	7	4	2
N_2 max outlet pressure (bar)	220	125	60

The Bordignon Booster is a pneumatic pump. By using compressed air, it increases the nitrogen N_2 pressure during the charging operation of gas springs for dies, in a safe and very precise way. Light and compact, the Bordignon Booster has a low compressed air consumption resulting in savings of time and costs.

OV GAS SPRING SYSTEM (ALTERNATIVE MANIFOLD)

Valveless nitrogen gas springs for an alternative manifold connection ("OV system"):

- Use of standard gas springs, fast delivery!
- Lower manufacturing and maintenance costs than additional manifold plates and dedicated manifold gas springs
- More compact plate dimensions
- Simple gas spring fixing with through-plate screws
- OV gas springs available strokes, dimensions, and the other specifications not listed on the next page, are the same as the corresponding standard models.
  (example: the unlisted specifications of model AGS1000-50-A-OV are the same as model AGS1000-50-A)

TECHNICAL NOTES

- OV gas springs use instructions:
  - Mounting instructions on the next page
  - Use instructions, information and catalogue help: see dedicated catalogue section
  - Cycles per minute MAX: see specifications tables for the corresponding standard model
- Plate material requirements:
  - Resilience KV ≥ 27 J (at 0°C)
  - Elongation at break A ≥ 14%
  - Respect national regulations about pressure equipment
- Minimum plate thickness = 25 mm

A

B

USE EXAMPLES

A OV gas springs and OV control panel fixed on a single low-thickness plate, without connection hoses.

B OV gas springs fixed on smaller plates connected by hoses, and standard control panel connected by hose.

OV CONTROL PANELS & OTHER ACCESSORIES FOR OV SYSTEM

See further on in this catalogue.

PED in accordance with 2014/68/EU

This gas spring series includes the models compliant with automotive standards

VW 39D 22100

Continued on the next page →

OV GAS SPRINGS

GENERAL FEATURES

In comparison with the corresponding standard models, OV gas springs are valveless (no side port) they have a bottom hole for direct connection (OR-sealed) to manifold plate, and they do not feature the bottom (square) groove.

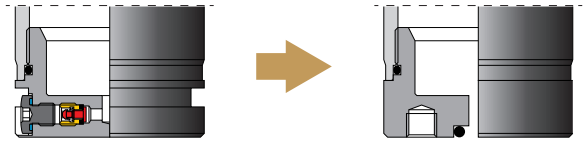

Standard model — Corresponding OV model

Screw size	Class	Tightening torque
M6	12.9	10.5 Nm
M8	12.9	26 Nm
M10	12.9	51 Nm
M12	12.9	89 Nm

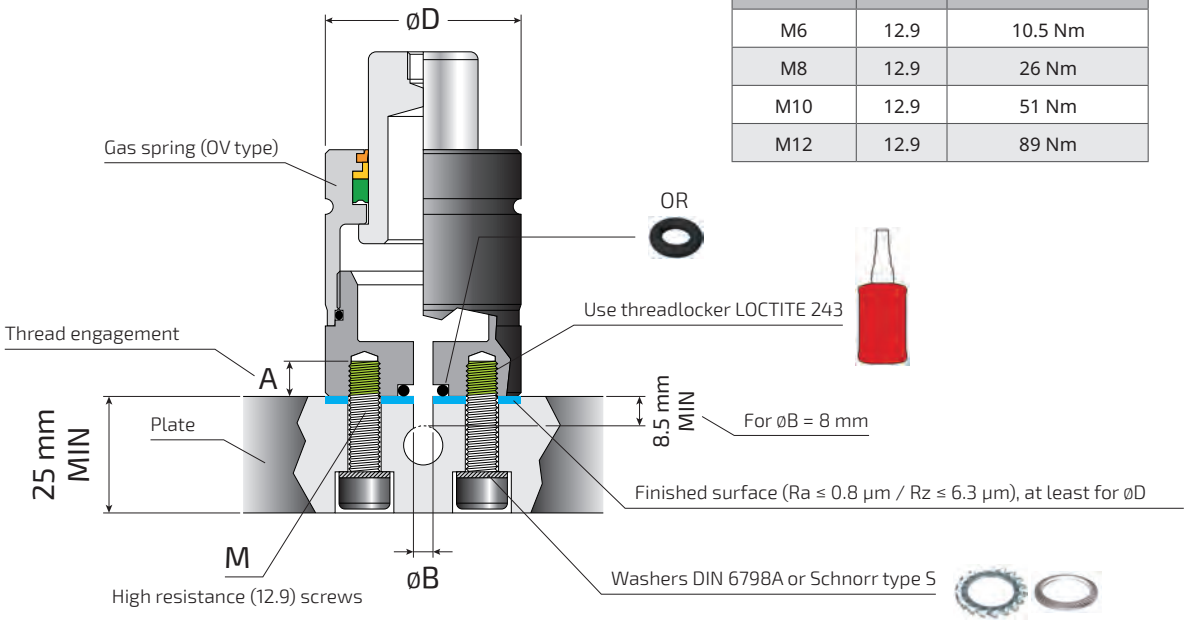

Order Code	Ø D (MIN)	Ø B ± 0.1	M ●	A ●	OR NBR 90 Sh. A ●
AGS 350-...-A-OV	32	5	M6	6	2025-010 (6.07 x 1.78)
AGS 500-...-A-OV	38	5	M6	6	2025-010 (6.07 x 1.78)
AGS 750-...-A-OV	45	5	M8	6	2025-010 (6.07 x 1.78)
AGS 1000-...-A-OV	50	5	M8	6	2025-010 (6.07 x 1.78)
AGS 1500-...-A-OV	63	5	M8	6	2025-010 (6.07 x 1.78)
AGS 2400-...-A-OV	75	5	M8	6	2025-010 (6.07 x 1.78)
AGS 4200-...-A-OV	95	8	M8	12	112-613 (9.92 x 2.62)
AGS 6600-...-A-OV	120	8	M10	12	112-613 (9.92 x 2.62)
AGS 9500-...-A-OV	150	8	M10	16	112-613 (9.92 x 2.62)
AGS 20000-...-A-OV	195	8	M12	18	112-613 (9.92 x 2.62)

● The thread engagement length A is the maximum available thread depth. Do not use thread engagement lengths < A .

● Number and layout of the threaded holes on the gas springs base: see corresponding standard models.

● 1 pc. OR is supplied with each OV gas spring.

APVA / APVB CONTROL PANEL FOR OV SYSTEM

This panel allows to charge and discharge a manifold plate ("OV system" or other) using a direct-coupling to the plate (no need for hoses).

TECHNICAL NOTES

A Charging valve (use only with CUC01 or COMPL or BOOSTER)
B Discharging valve
C Pressure gauge
D No. 3 connection ports G1/4
E No. 1 connection port G1/8
- The connection ports are plugged
- No. 2 fixing holes for M8 high resistance (12.9) hex-socket screws

Configurations and Dimensions

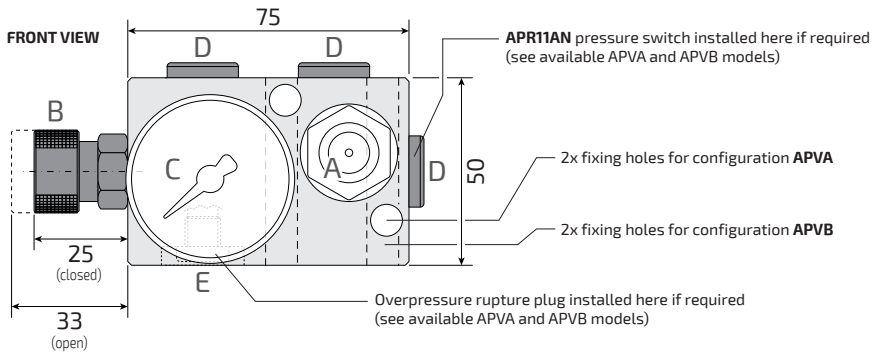

APVA / APVB

Configuration for model **APVA**

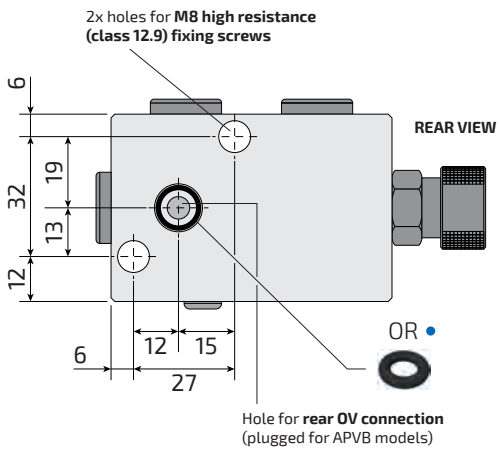

Configuration for model **APVB**

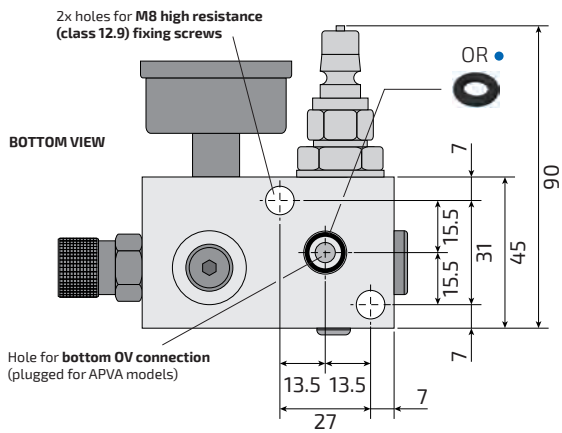

Order Code	**All models are available with safety valve VS500 already assembled (on request).**
APVA	Control panel for OV system with rear direct-connection to plate
APVB	Control panel for OV system with bottom direct-connection to plate
APVAPAN / APVBP AN	Control panel APVA or APVB with APR11AN pressure switch (50-300 bar normally open)
APVARP / APVBRP	Control panel APVA or APVB with overpressure rupture plug
APVAF / APVBF	Control panel APVA or APVB with APR11AN pressure switch (50-300 bar normally open) and with overpressure rupture plug

GAS SPRING TEST DEVICE

Code: GST...

Order Code: GST01	
Measuring range	0 - 10000 daN
Recommended F0 value	0 - 10000 daN
Max. Length	308 mm
Max. Diameter	95 mm
EN ISO 7500-1	CLASS 1 (±1%)
Power supply	100 - 240 VAC 50 - 60 Hz
L x P x H	400 x 250 x 1288
Weight	50 kg.

Order Code: GST02	
Measuring range	0 - 20000 daN
Recommended F0 value	0 - 20000 daN
Max. Length	328 mm
Max. Diameter	150 mm
EN ISO 7500-1	CLASS 1 (±1%)
Power supply	100 - 240 VAC 50 - 60 Hz
L x P x H	400 x 250 x 1309
Weight	103 kg.

The gas spring testing device is specially designed to check the nominal load values of gas springs. It determines whether there is a gas leak in the gas spring's internal mechanism by measuring the applied load and the initial force. The gas spring is placed on the plate located in the body.
It is compressed with the help of the lifting jack at the bottom. The applied force is measured in "kg" units using the force measuring device located on the compressed gas spring system. If the initial force of the preferred gas spring is suitable according to the catalog, it is then mounted in the area where it will be used.
Note: It is produced as a cabin type if request

Usage Scheme

The Gas spring lower body is placed on the plate

Reset digital display

The shaft is lifted with a lifting jack until it touches the upper plate

Reset is done on the caliper

After reseting 1 mm movement is given to the gas spring with lifting jack
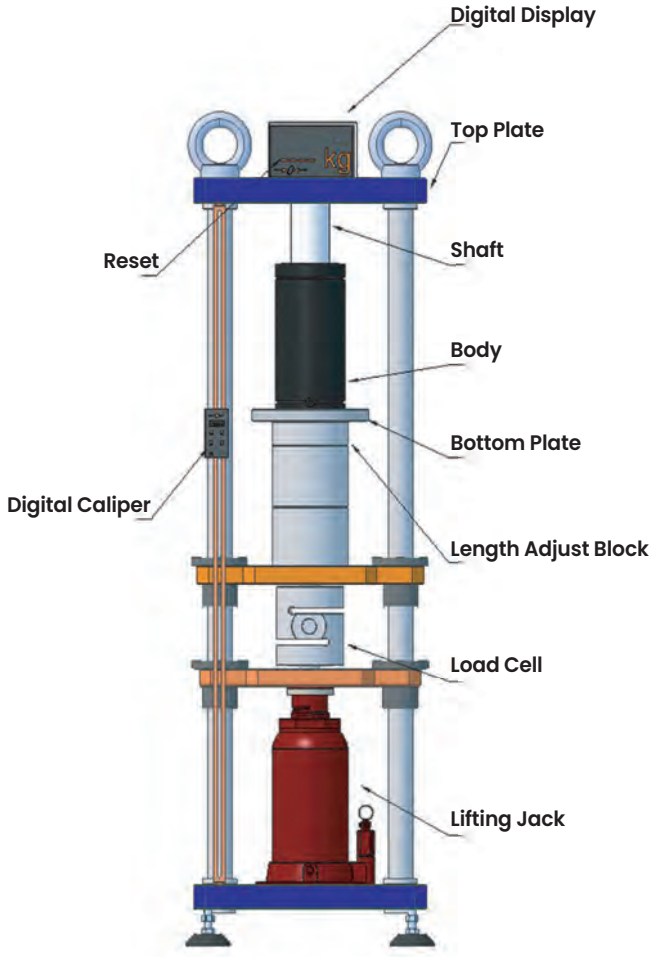
The value on the digital display is considered to be the initial power